SPXFLOW®

INSTRUCTION MANUAL

APV CU4 Direct Connect

CONTROL UNIT

FORM NO.: H323871 REVISION: GB-9

READ AND UNDERSTAND THIS MANUAL PRIOR TO OPERATING OR SERVICING THIS PRODUCT.



APV®

SPXFLOW®

CE Declaration of Conformity
UKCA Declaration of Conformity

We,

DESIGN CENTER/MANUFACTURER: **SPX Flow Technology Germany GmbH**
Gottlieb-Daimler-Str. 13, D-59439 Holzwickede

MANUFACTURING FACILITY: **SPX Flow Technology Poland sp. z o.o.**
Rolbieskiego 2, 85-862 Bydgoszcz, Poland

AUTHORIZED REPRESENTATIVE: (for UKCA) **SPX Flow Europe Ltd.**
Building A, Compass House, Manor Royal
Crawley, RH10 9PY

declare under our sole responsibility that the

SPX FLOW APV brand Control Units of the series
CU4 Direct Connect and AS-interface Control Unit
CU4plus Direct Connect, AS-interface and IO-Link Control Units
CU4 110V Module (*)

meet the requirements of the
Electromagnetic Compatibility Directive 2014/30/EU
& protection class IP 67 EN 60529, EN 61000-6-2, EN 61000-6-4, EN 60068-2-6
RoHS Directive 2011/65/EU
Low Voltage Directive 2014/35/EU (*only applicable for APV CU4 110V Module)

Holzwickede, November 2022

ppa. B. Ariatabar

Dr.-Ing. Behdad Ariatabar, Design Center Lead - Valves

meet the requirements of the
Electromagnetic Compatibility Regulations 2016 No. 1091 & BS harmonized standards
Restriction of Use of Certain Hazardous Substances in Electrical and Electronic Equipment Regulation 2012 No. 3032
Electrical Equipment (Safety) Regulations 2016 No. 1101 (*only applicable for APV CU4 110V Module)

Crawley, November 2022

Ewout Roozendaal, Director Global Pricing

Content

		Page
1.	**Abbreviations and Definitions**	**6**
2.	**Safety Instructions**	**6**
2.1.	Sentinels	
2.2.	Intended Use	
2.3.	General Regulations for Careful Handling	
2.4.	Welding instructions	
2.5.	Persons	
2.6.	Warranty	
3.	**General Terms**	**9**
3.1.	Purpose of use	
3.2.	Design of CU4 Direct Connect	
3.3.	Function of the individual components	
4.	**Mechanics and Pneumatics**	**13**
4.1.	Air connection for valves with turning actuators	
4.2.	Air connections for seat valves and double seat mix proof valves	
4.3.	Pressure relief valve	
4.4	Functional description - block diagrams	
4.5.	Technical Data / Standards	
4.6.	Solenoid valves	
4.7.	Throttling function	
4.8.	NOT element	
5.	**Adapter**	**21**
5.1.	Valves with turning actuator, e.g. butterfly valves	
5.2.	Single seat valves	
5.3.	Double seat mix proof valves DE3, DA3+	
5.4.	Double seat mix proof valves D4, D4 SL, DA4	
6.	**Electronic module**	**22**
6.1	Function / Block diagram	
6.2.	Functional description of connections	
6.3.	Technical data for electronic module	
6.4.	Connections	
6.5.	LED indication	
6.6.	Wiring examples	
7.	**Feedback unit**	**28**
7.1.	General terms	
7.2.	Sensors	
7.3.	Adjustment of valve position feedback	
7.4.	Use of external sensor	
8.	**CU Assembly and Startup**	**29**
8.1.	Valves with turning actuator, e.g. butterfly valves	
8.2.	Single seat valves	
8.3.	Double seat mix proof valves DE3, DA3+	
8.4.	Double seat mix proof valves D4, D4 SL, DA4	
9.	**Accessories and Tools**	**41**
10.	**Service**	**42**
10.1.	Disassembly	
11.	**Trouble Shooting**	**43**
12.	**Spare Parts Lists**	**45**

IT IS ESSENTIAL TO READ THIS INSTRUCTION MANUAL BEFORE USE OF THE CONTROL UNIT!

1. Abbreviations and Definitions

A	**Exhaust air**
AWG	**American Wire Gauge**
CE	**Communauté Européenne**
CU	**Control Unit**
DI	**Digital Input**
DO	**Digital Output**
EMV	**Electromagnetic Compatibility**
EU	**European Union**
GND	**Ground/mass potential**
IP	**International Protection**
LED	**Luminous diode**
N	**Pneumatic Air Connection NOT element**
NEMA	**National Electrical Manufacturers Association**
P	**Supply Air Connection**
PWM	**Pulse-width modulation**
Y	**Pneumatic Air Connection**

2. Safety Instructions

2.1. Sentinels

Meaning:



Danger! Direct danger which can lead to severe bodily harm or to death!



Caution! Dangerous situation which can lead to bodily harm and/or material damage.



Attention! Risk as a result of electric current.



Note! Important technical information or recommendation.

These special safety instructions point directly to the respective handling instructions. They are accentuated by the corresponding symbol. Carefully read the instructions to which the sentinels refer. Continue handling the control unit only after having read these instructions.

2. Safety Instructions

2.2. Intended Use

The CU4 control unit is only intended for use as described in chapter 3.1. Use beyond that described in chapter 3.1. does not comply with the regulations and SPX FLOW shall not be responsible for any damage resulting from this non-observance. The operator bears the full risk. Prerequisites for proper and safe operation of the control unit are the appropriate transport and storing as well as the professional assembly. Intended use also means the observance of operating, service and maintenance conditions.

2.3. General Regulations for Careful Handling

To ensure a faultless function of the unit and a long service life, the information given in this instruction manual as well as the operating conditions and permissible data specified in the data sheets of the control unit for process valves should be strictly adhered to.

- The operator is committed to operating the control unit in faultless condition, only.
- Observe the general technical rules while using and operating the unit.
- Observe the relevant accident prevention regulations, the national rules of the user country as well as your company-internal operating and safety regulations during operation and maintenance of the unit.
- Switch off the electric power supply before carrying out any work on the system!
- Note that piping or valves that are under pressure must not be removed from a system!
- Take suitable measures to prevent unintentional operation or impermissible impairment.
- Following an interruption of the electric or pneumatic supply, ensure a defined and controlled re-start of the process!
- If these instructions are not observed, SPX FLOW will not accept any liability. Warranties on units, devices and accessories will expire!

2. Safety Instructions



2.4. Welding instructions

It is generally recommended to avoid welding work in process installations in which control units are installed and connected. If welding is nonetheless required, earthing of the electric devices in the welding area is a necessity.



2.5. Persons

- Installation and maintenance work may only be carried out by qualified personnel and by means of appropriate tools.
- The qualified personnel must get a special training with regard to possible risks and must know and observe the safety instructions indicated in the instruction manual.
- Work at the electrical installation may only be carried out by personnel skilled in electrics!

2.6. Warranty

This document does not contain any warranty acceptance.
We refer to our general terms of sale and delivery.
Prerequisite for a guarantee is the correct use of the unit in compliance with the specified conditions of application.



Note!
This warranty only applies to the Control Unit. No liability will be accepted for consequential damage of any kind arising from failure or malfunction of the device.

3. General Terms

3.1. Purpose of use

The CU4 Direct Connect Control Unit is designed for the control of process valves used in the food and related industries.

The CU4 control unit operates as interface between process control and process valve and controls the electric and pneumatic signals.

The pneumatic control of valves is undertaken via the solenoid valves. The control unit controls the valve positions, **open** and **closed**, via integrated and external sensors. The electronic module undertakes the task to process the switching signal from the control and to control the corresponding solenoid valves. The electronic module also provides for potential-free contacts. The corresponding light signals in the control unit provide for an external indiciation of the valve positions.

3.2. Design of CU4 Direct Connect (fig. 3.2.)

fig. 3.2.

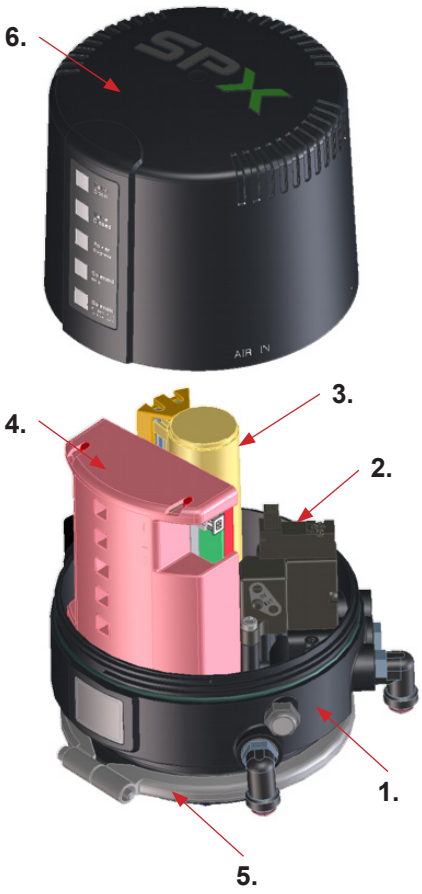

The CU4 Direct Connect Control Unit mainly consists of the following components:

1. The Control Unit base with integrated air channels and electric and pneumatic connections as well as viewing windows with type label.
2. 1 or 3 solenoid valves for the control of the valve actuators and for the seat lifting of double seat valves.

- 1 solenoid valve with 1 logic NOT element for the control of the valve actuators.

3. Sensor module with 2 integrated Hall sensors or 2 external proximity switches to detect the valve position.
4. Electronic module for the electric supply, communication with the control, evaluation of feedback signals and control of solenoid valves as well as the valve position indication through LED.
5. Clamp ring to fasten the CU4 on the adapter.
6. Cover with LED optics.

fig. 3.2.1

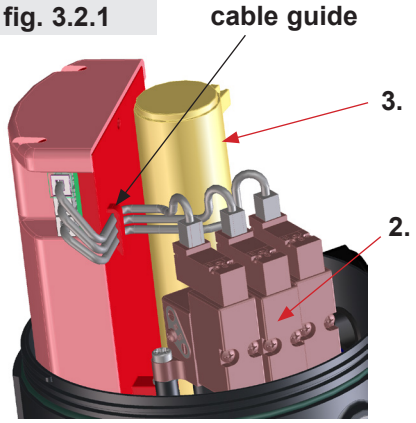

The cable/s by means of which the solenoid valves are connected with the electronic module must be guided through the cable guide at the rear side of the electronic module. **(fig. 3.2.1)**

3. General Terms

3.3. Function of the individual components

The installation of the control unit is undertaken by special adapters which are available for the different valve types, see **chapter 5**. Adapter. The snap connectors for supply air and pneumatic air to the individual cylinders of the valves are located at the outside of the control unit. In case of control units for valves with turning actuator, the pneumatic air is transferred internally to the actuator. The air supply of the control unit is equipped with an exchangeable air filter. Observance of the required compressed air quality is imperative. Please also see **chapter 4.5**.

The number of the solenoid valves installed in the CU4 depends on the valve actuators to be controlled. Single seat and butterfly valves and double seat valves without seat lift function require 1 solenoid valve. Control units for double seat valves are equipped with 3 solenoid valves. For the manual actuation, the solenoid valves are provided with a safe handle which is easy to operate.

The electronic module installed in the control unit has the task to process the electric signals from the control, to control the solenoid valves and to evaluate the feedback signals from the feedback unit. Moreover, the signalling and indication of the valve positions as well as additional diagnostic functions are undertaken via the electronic module.
The electronic module is the interface between control actuators or sensors. Depending on the control type, different modules are available, e.g. Direct Connect, AS-interface, Profibus and DeviceNet. The CU4 Direct Connect module described herein provides for the direct parallel wiring of the control.

A feedback unit is required to detect the valve position.
The CU4 Direct Connect is equipped with 2 adjustable Hall effect sensors.
These are activated by a valve control rod installed on the operating cam. In this way, the **open** and **closed** valve position can be detected.
The 2 Hall effect sensors are continuously adjustable over an additional range. Thus, feedback messages for different valves with different stroke lengths can be adjusted properly. Alternatively, external proximity switches can be connected instead of the integrated Hall effect sensors when the valve position indication is undertaken direct at the process valve.

3. General Terms

3.3. Function of the individual components

The luminous diodes are arranged at the front side of the electronic module. Their signals are visibly indicated to the outside by an optical window in the cover of the control unit. Beside the open and closed valve position, the existence of the operating voltage as well as different diagnostic information are indicated. **Chapter 6.5. "**LED indication" contains more details.

The complete control unit has been designed on the building block principle. By exchange of the electronic module, the control type can be changed, e.g. from direct control (Direct Connect) to communication with AS-interface.



Note! Wiring must also be changed.

4. Mechanics and Pneumatics

4.1. Air connection for valves with turning actuators

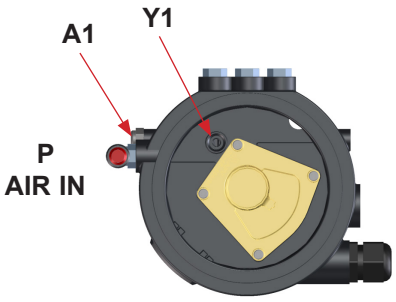

4.1.1. Function

CU41-T-DC
design for valve with turning actuator, e.g. butterfly valves

P	air supply with integrated particle filter
Y1	bore to transfer control air to turning actuator
A1	exhaust air, with exhaust silencer

4.2. Air connections for seat valves and double seat mix proof valves

4.2.1. Function

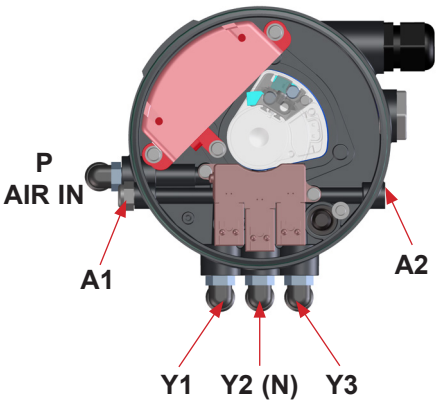

CU41-S-DC / CU41-M-DC / CU41-D4
design for seat valves and double seat mix proof valves without seat lift

P	air supply with integrated particle filter
Y1	control air connection for main actuator
A1	exhaust air, with exhaust silencer

CU41N-S-DC
design for seat valves with NOT element

P	air supply with integrated particle filter
Y1	control air connection for main actuator
N	pneumatic air connection for the spring support of the actuator by compressed air, via NOT element
A1	exhaust air, with exhaust silencer

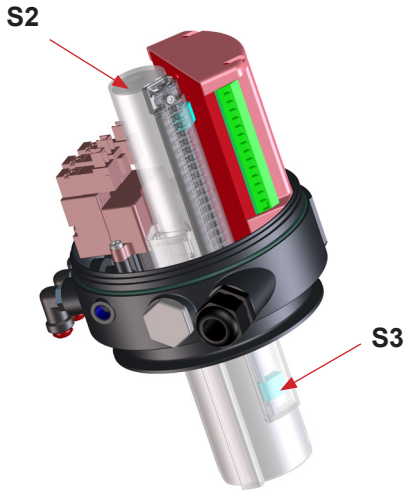

CU43-M-DC / CU43-D4
design for double seat mixproof valves with seat lift

P	air supply with integrated particle filter
Y1	control air connection for main actuator
Y2	pneumatic air connection for seat lift actuator of upper seat lifting
Y3	pneumatic air connection for seat lift actuator of lower seat lifting
A1/A2	exhaust air, with exhaust silencer

4. Mechanics and Pneumatics

4.3. Pressure relief valve

The base of the control unit is equipped with a pressure relief valve which prevents an inadmissible pressure build-up in the inner control unit.
If required, the pressure relief vents into the clearance between the base and the adapter of the control unit.

DANGER

The pressure relief valve must not be mechanically blocked under any circumstances.

4. Mechanics and Pneumatics

4.4 Functional description - block diagrams

4.4.1. CU41 Direct Connect

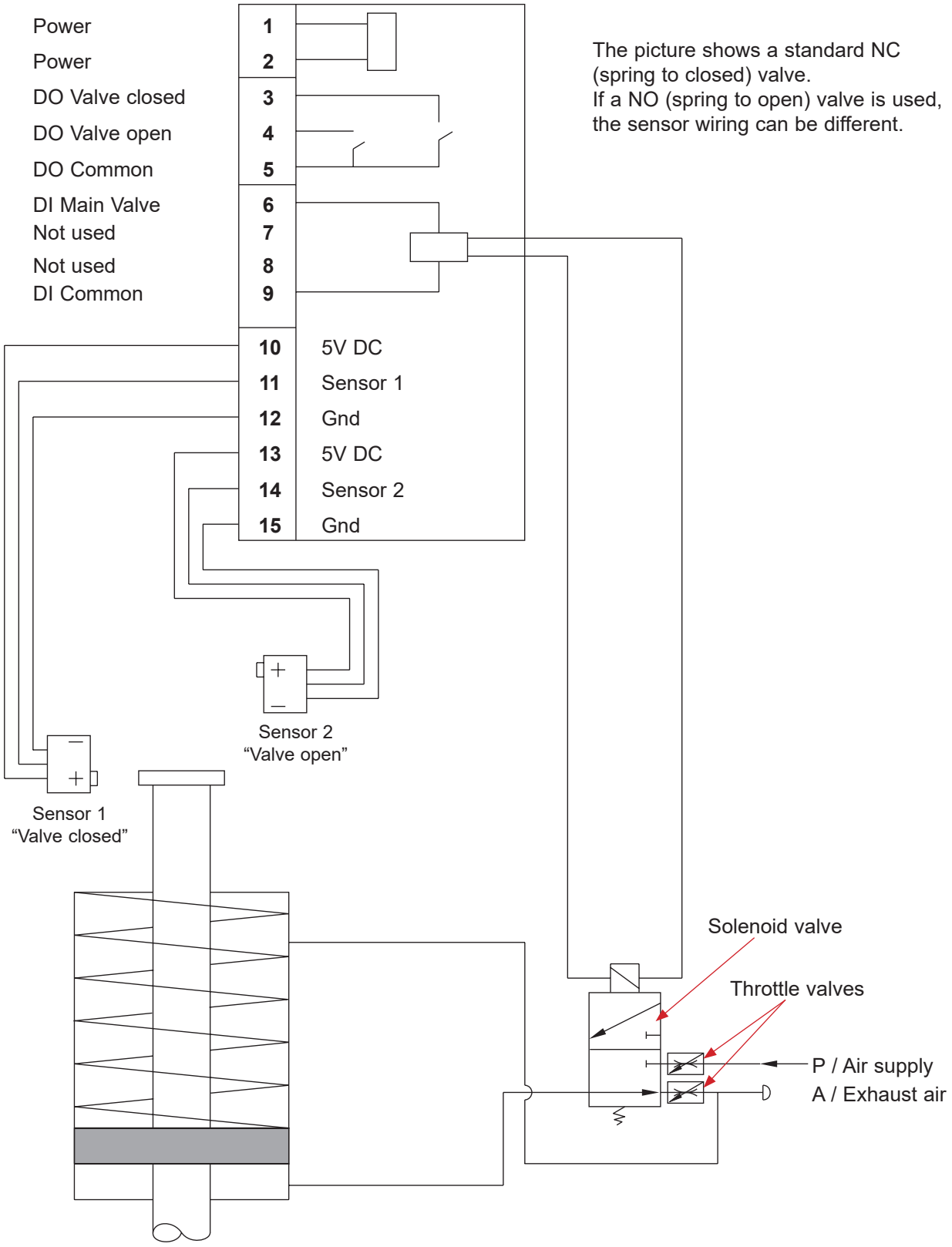

4. Mechanics and Pneumatics

4.4.2. CU41N Direct Connect

Functional description - block diagram

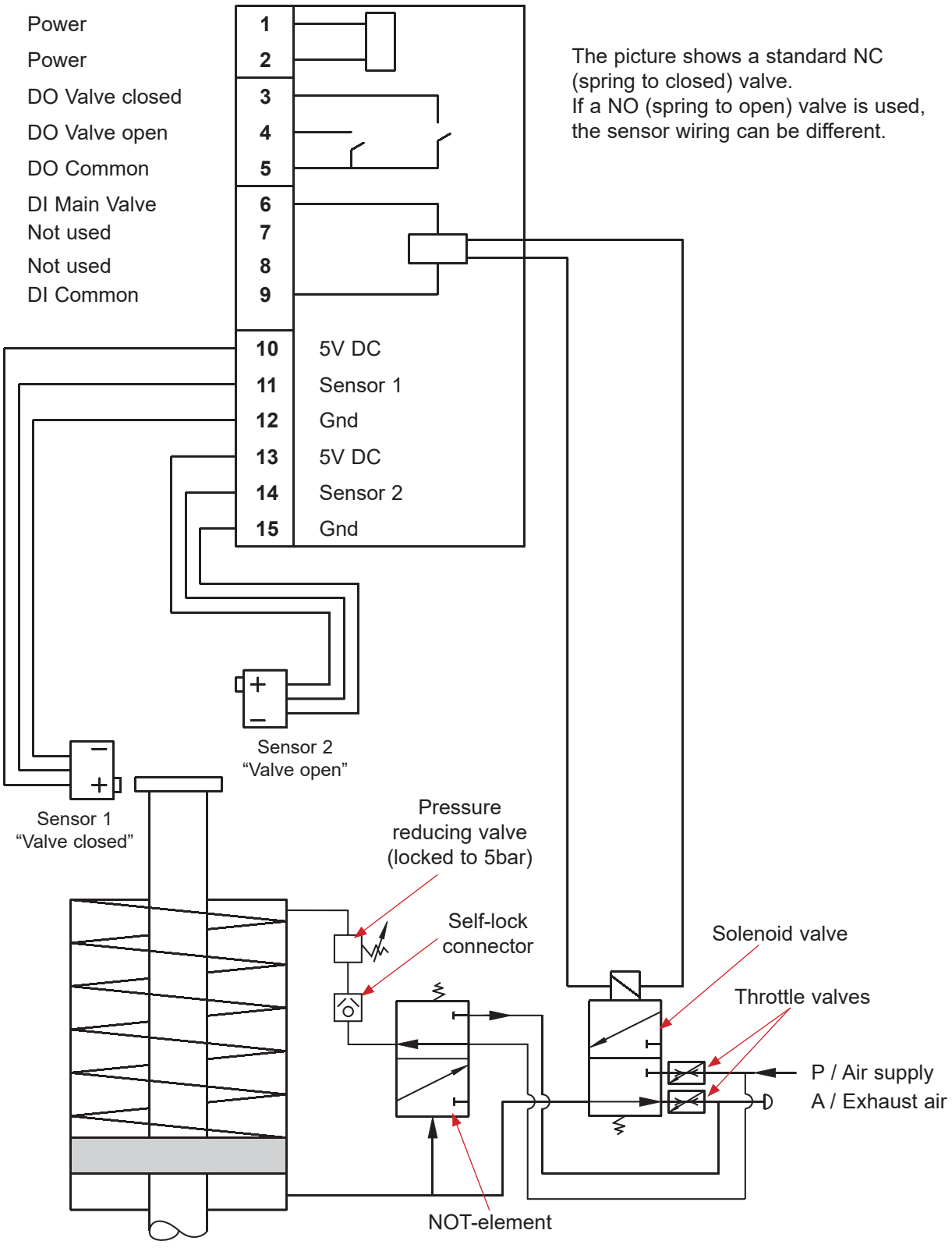

4. Mechanics and Pneumatics

4.4.3. CU41-D4 Direct Connect for D4 double seat mix proof valve

Functional description - block diagram

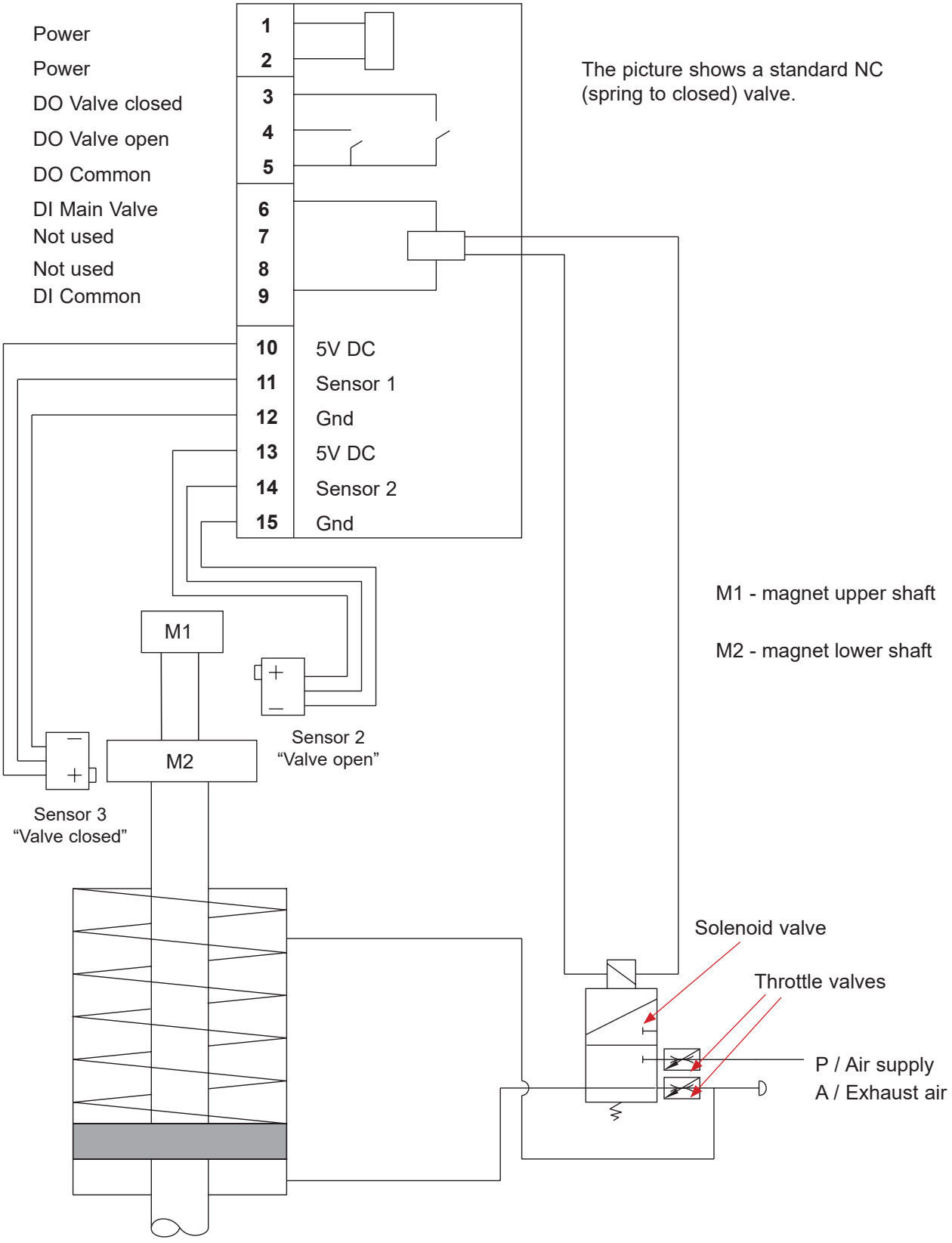

4. Mechanics and Pneumatics

4.4.4. CU43 Direct Connect for DE3, DA3+ double seat mix proof valve

Functional description - block diagram

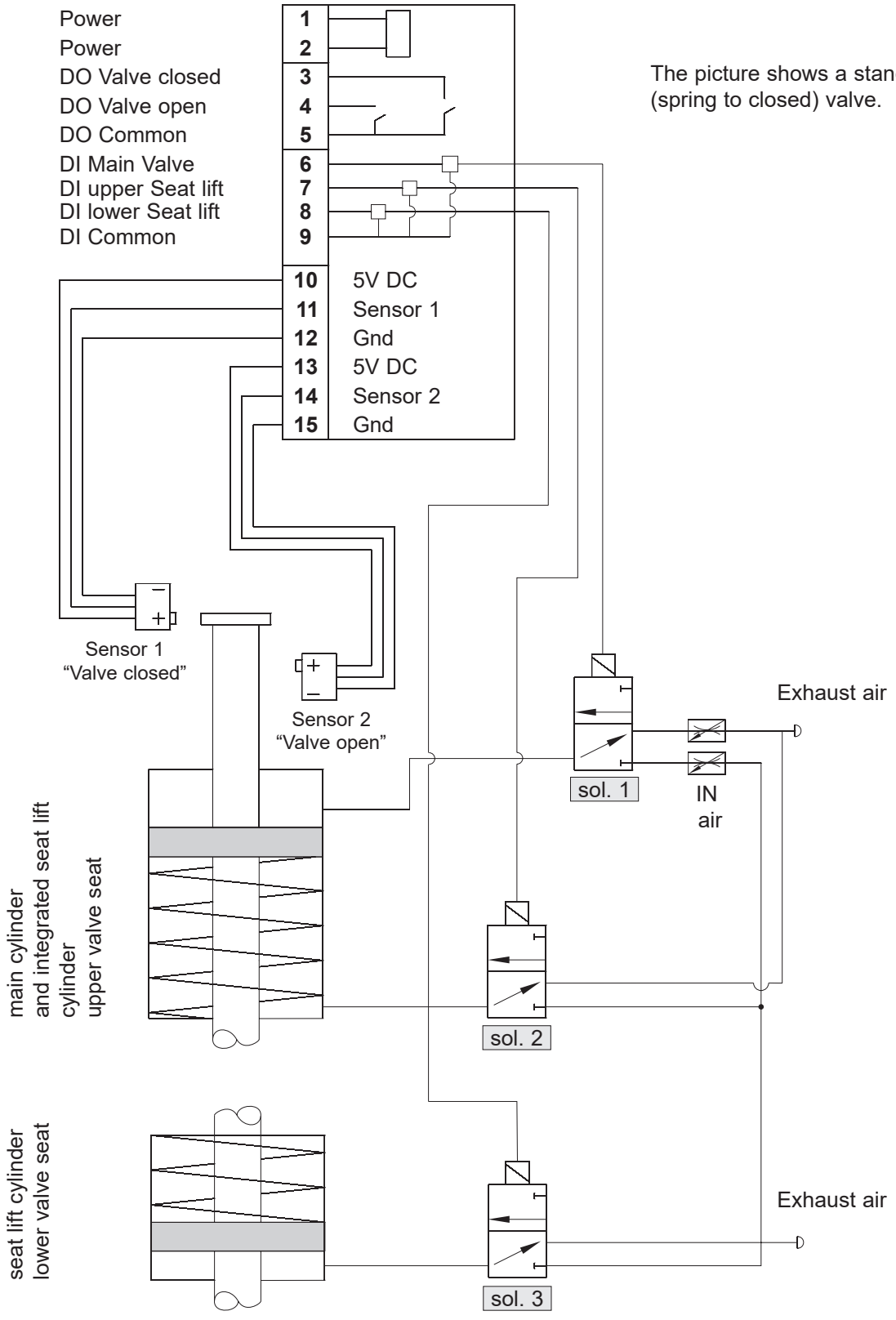

4. Mechanics and Pneumatics

4.4.5. CU43-D4 Direct Connect for DA4 / D4 SL double seat mix proof valves

Functional description - block diagram

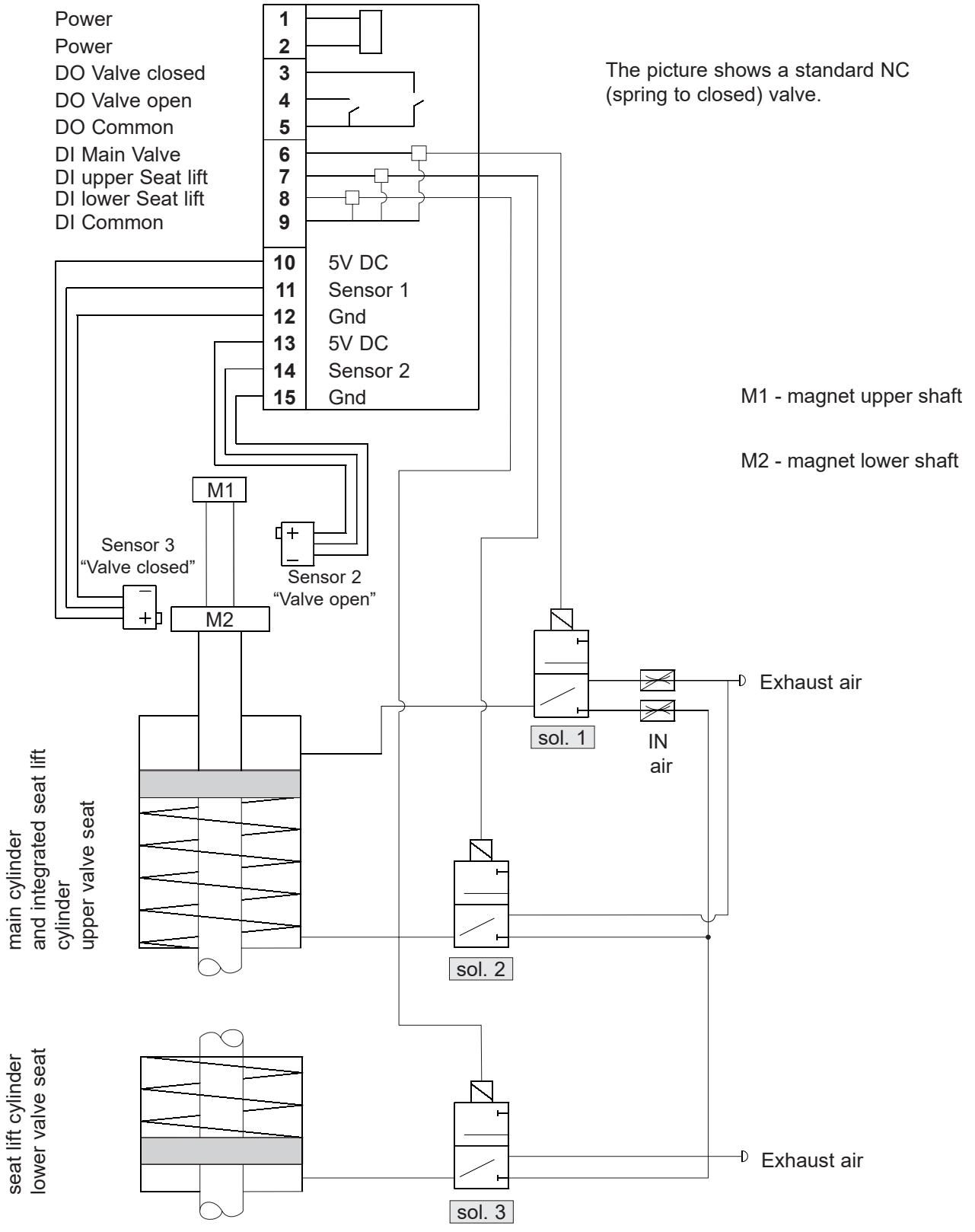

4. Mechanics and Pneumatics

4.5. Technical Data / Standards

Material:	PA6.6
Ambient temperature:	-20°C to +70°C
EU:	EMC 2014/30/EU (89/336/EEC)
Standards and environmental audits:	protection class IP 67 EN 60529 EMC interference resistance EN 61000-6-2 EMC emitted interference EN 61000-6-4 vibration/oscillation EN 60068-2-6 safety of machinery DIN EN ISO 13849-1
Air hose:	6 mm / ¼“ OD
Pressure range:	6–8 bar
Compressed air quality:	quality class acc. to DIN ISO 8573-1
content of solid particles:	quality class 3, max. size of solid particles per m³ 10000 of 0,5 µm < d < 1,0 µm 500 of 1,0 µm < d < 5,0 µm
content of water:	quality class 3, max. dew point temperature -20°C For installations at lower temperatures or at higher altitudes, consider additional measures to reduce the pressure dew point accordingly.
content of oil:	quality class 1, max. 0,01 mg/m³

The oil applied must be compatible with Polyurethane elastomer materials.

4. Mechanics and Pneumatics

4.6. Solenoid valves

In the base of the control unit max. 3 solenoid valves are installed. The 3/2-way solenoid valves are connected with the electronic module by moulded cables and plug connectors.

control: effected by **pwm-signal**
handle: rotary switch at valve

4.7. Throttling function

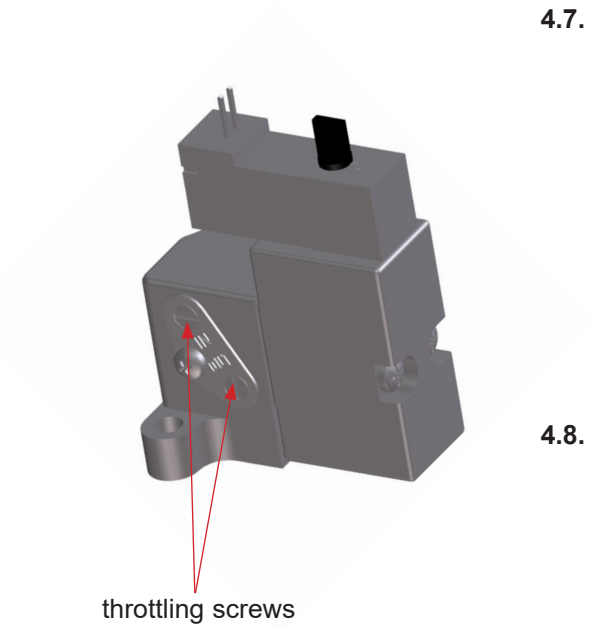

throttling screws

The operating speed of the valve actuator can be varied or reduced. This may be necessary to slacken the actuation of the valve in order to prevent pressure hammers in the piping installation.
For this purpose, the supply and exhaust air of the **first solenoid valve** can be adjusted via the throttling screws respectively allocated in the interface of the solenoid valve. By turning the screws in anticlockwise direction, the inlet or outlet air is throttled.

4.8. NOT element

Through the installation of the logic NOT element, the closing force of the valve actuator can be increased by additional compressed air.
The NOT element conveys the compressed air via an external reducing valve (max. 5 bar) to the spring side of the valve actuator.

The pressure reducing valve is fixed to 5 bar.

Note!
The air connection of the NOT element is equipped with an integrated non-return valve.

The air hose must be slided into the air connection until it stops - in order to open the non-return valve.

The NOT element is also used for air/air actuators.

5. Adapter

Adapter for different process valves

5.1. Valves with turning actuator, e.g. butterfly valves



5.2. Single seat valves

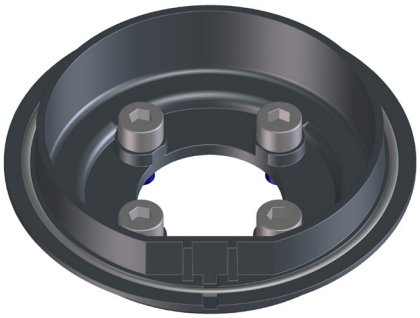

5.3. Double seat mix proof valves DE3, DA3+



5.4. Double seat mix proof valves D4, D4 SL, DA4



6. Electronic module

6.1 Function / Block diagram

The electronic module CU4 Direct Connect operates as interface between superordinated control (PLC) and is connected direct by parallel wiring, i.e. every individual signal is on a separate line. The large input voltage range from 15 to 48VDC provides for versatile connections. All operating ranges within the electronic module such as the control of the solenoid valves, position feedback and LED indication are separated galvanically and can, thus, be operated with different voltages. Control of the solenoid valves is effected in energy-saving manner via pwm-signals.

Electronic module
with sensors for all
SPX FLOW APV valves

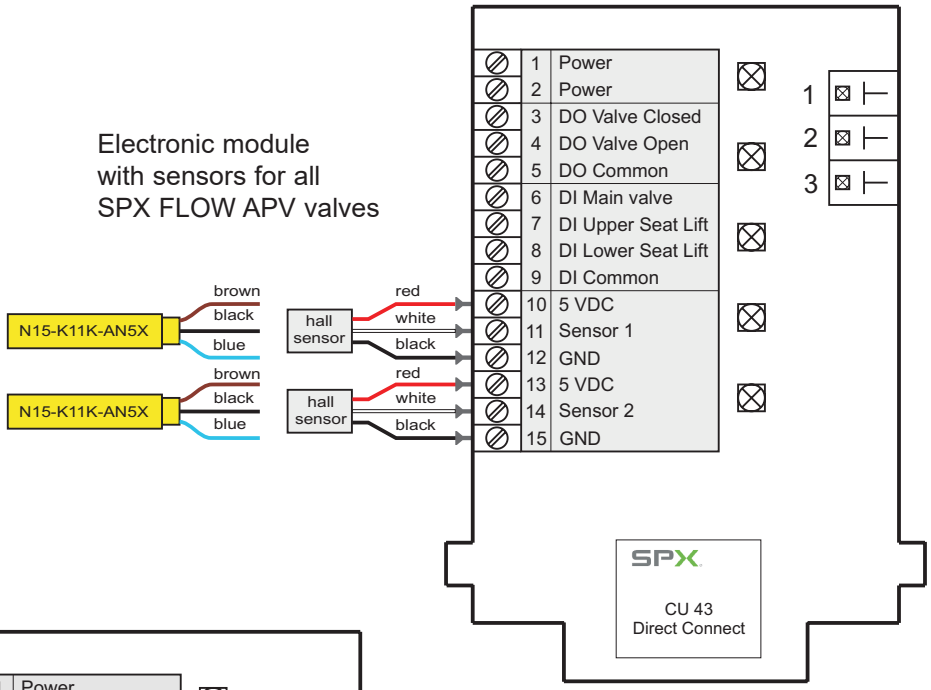

Electronic module
with sensors for
SPX FLOW APV / WCB D4 valves

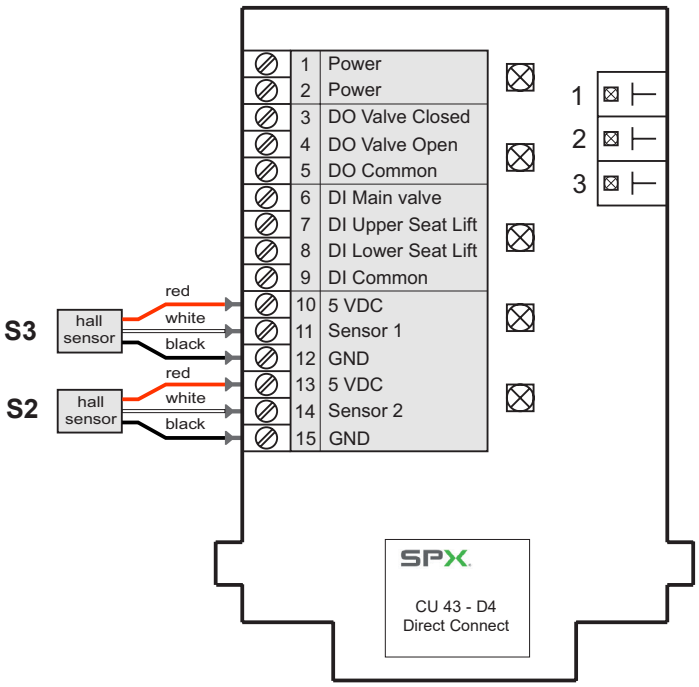

6. Electronic module

6.2. Functional description of connections

Terminal	CU41 M12-5-pol. plug pin	CU43 M12-8-pol. plug pin	Designation	Functional description for all valve types	Functional description for D4, D4 SL and DA4 valve types
1	1 brown	2 brown	Power	Operating voltage	Operating voltage
2	3 blue	7 blue	Power	Operating voltage	Operating voltage
3	2 white	3 green	DO Closed Valve	Digital potential-free output for closed valve position	Digital potential-free output for closed valve position
4	5 grey	1 white	DO Open Valve	Digital potential-free output for open valve position	Digital potential-free output for open valve position
5	Bridge to Terminal 1	Bridge to Terminal 1	DO Common	Common potential for digital output to valve position indication	Common potential for digital output to valve position indication
6	4 black	6 pink	DI Main Valve	Digital input to control 1st solenoid valve (valve open)	Digital input to control 1st solenoid valve (valve open)
7		4 yellow	DI Upper Seat Lift	Digital input to control 2nd solenoid valve (seat lifting of upper valve seat)	Digital input to control 2nd solenoid valve (seat lifting of upper valve seat)
8		8 red	DI Lower Seat Lift	Digital input to control 3rd solenoid valve (seat lifting of lower valve seat)	Digital input to control 3rd solenoid valve (seat lifting of lower valve seat)
9	Bridge to Terminal 2	5 grey	DI Common	Common potential for digital inputs to control valve	Common potential for digital inputs to control valve
10			5 VDC	Voltage supply for valve sensor	Voltage supply for valve sensor
11			Sensor 1	Sensor signal 1 (closed valve position)	Connection Hall sensor 3 (closed valve position)
12			GND	Mass potential for sensor supply	Mass potential for sensor supply
13			5 VDC	Voltage supply for valve sensor	Voltage supply for valve sensor
14			Sensor 2	Sensor signal 2 (open valve position)	Connection Hall sensor 2 (open valve position)
15			GND	Mass potential for sensor supply	Mass potential for sensor supply

6. Electronic module

6.3. Technical data for electronic module

CU4 Direct Connect

Operating voltage:	15 – 24VDC
Supply of solenoid valve:	pwm-signal from electronic module
Dig. input (DI):	15 – 48VDC Imax. 1mA/24VDC threshold voltage 5V to 7V
Dig. output (DO):	Umax. 48VDC Imax. 150mA RI 5,6Ohm / 100mA
Voltage supply of sensors:	5VDC (+/-5%)

Power consumption

Minimum (Power ON, 2 LED, no solenoid valve)	about 20mA, at 24VDC
Typically (Power ON, 2 LED, 1 solenoid valve)	about 35mA, at 24VDC
Maximum (Power ON, 3 LED, 2 solenoid valves)	about 55 mA, at 24VDC

Connecting terminals:	conductor cross section 0,5-1,5 mm² (with conductor sleeve) complying with AWG 20-16

6. Electronic module

6.4. Connections

Sensors to detect the valve positions:

Internal sensors: Hall effect sensors
(APV valves): H320385
(APV / WCB D4 valves): H337014
UB 4,75-5,25 VDC
operating distance according to
SPX FLOW specification

External sensors: Inductive proximity switches: H208844
UB 4,75-5,25 VDC
operating distance according to
SPX FLOW specification

6. Electronic module

6.5. LED indication

External luminous displays			
Valve **Open**	colour green, permanent light	▬	valve in open position
Valve **Closed**	colour orange, permanent light	▬	valve in closed position
Power **Diagnose**	colour green, permanent light	▬	operating voltage at module - faultless
	colour green, flashing	▬ ▬ ▬	failure solenoid valve (wire fracture)
Solenoid Main	colour blue, permanent light	▬	main solenoid valve (1) controlled
Solenoid Main ○ **upper seat** ○○ **lower seat**	colour blue, 1 blink	▬ ▬	solenoid valve (2) for upper seat lift controlled
	colour blue, 2 blinks	▬ ▬ ▬	solenoid valve (3) for lower seat lift controlled
	colour blue, permanent blink	▬ ▬ ▬ ▬	solenoid valves (2) + (3) for diagnosis, only
Internal luminous displays			
Luminous diode	**1**		1st solenoid valve (1) controlled
Luminous diode	**2**		2nd solenoid valve (2) controlled
Luminous diode	**3**		3rd solenoid valve (3) controlled

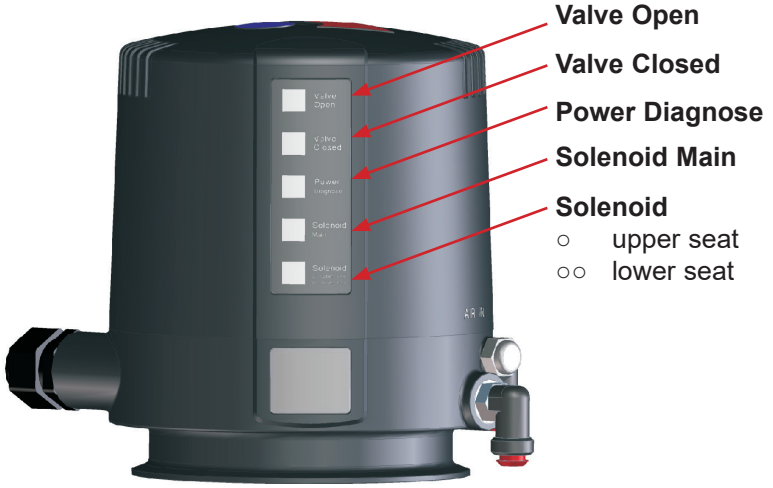

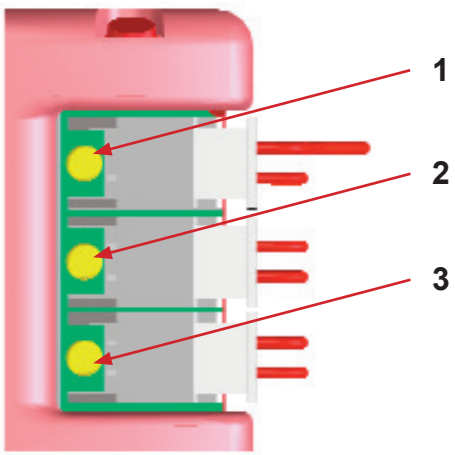

6. Electronic module

6.6. Wiring examples

Example 1

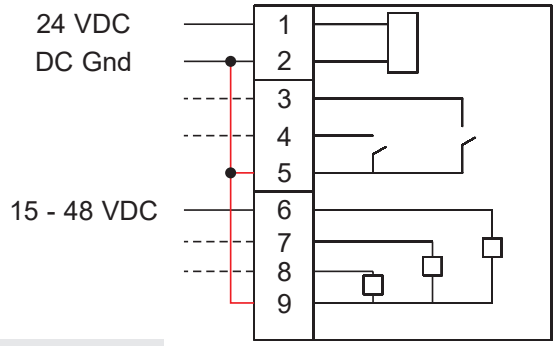

5/7 cable required
DC supply
DC valve signal
2 feedback to SPS
common DC mass

Example 2

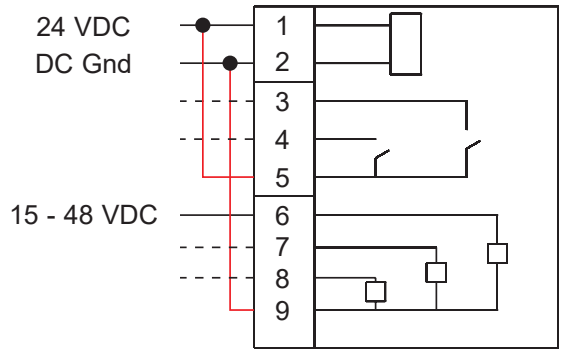

5/7 cable required
DC supply
DC valve signal
2 feedback to SPS
common DC mass

Example 3

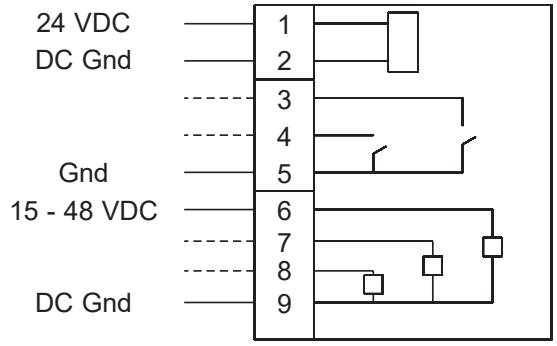

7/9 cable required
DC supply
DC valve signal
2 feedback to SPS
separated DC mass, functional units
galvanically isolated

Example 4

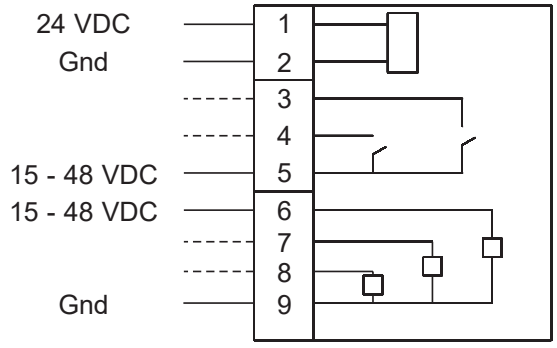

7/9 cable required
DC supply
DC valve signal
2 feedback to SPS
separated DC mass, functional units
galvanically isolated

Caution!
This control unit complies with the EU EMC Directive.
In special exceptions, in installations with high levels of disturbance, interference, or noise, the Digital IO may show unpredictable behavior. To avoid this, use shielded cables or lower the input impedance for inputs with a resistor.

7. Feedback unit

Feedback unit for
SPX FLOW APV valves

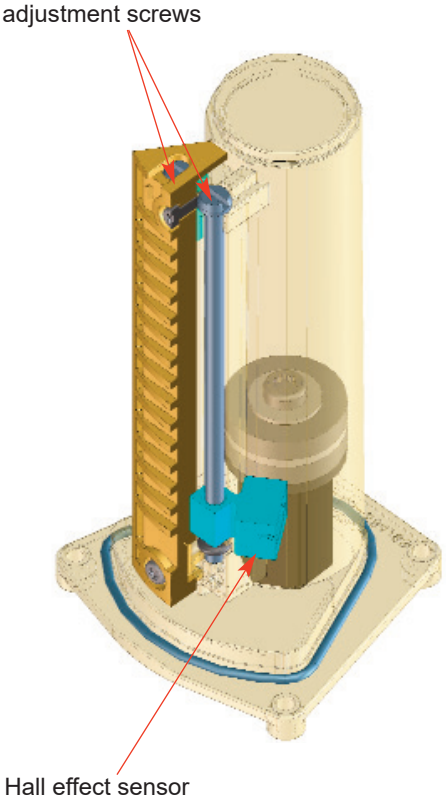

7.1. General terms

For the internal registration of the valve position indication, the feedback unit with 2 Hall effect sensors is applied. It is used when single seat and butterfly valves are installed.
The control of these sensors is effected by magnets assembled on the valve shaft rod. The Hall effect sensors are installed on a movable threaded rod. By means of this assembly, the sensors can be adjusted via a large range, in accordance with the valve stroke.

7.2. Sensors

Hall effect sensors (APV valves): H320385
Hall effect sesonrs (APV / WCB D4 valves): H337014
UB 4,75-5,25 VDC
operating distance according to SPX FLOW specification

7.3. Adjustment of valve position feedback

By turning of the adjustment screws on which the Hall effect sensors are installed, the sensors can be moved into the respectively required position to detect the valve position. The o-rings on the adjusting srews prevent accidental displacement of these positions. After the installation of the control unit, check the correct adjustment of the position of the Hall sensor.

Feedback unit for
SPX FLOW APV / WCB D4 valves

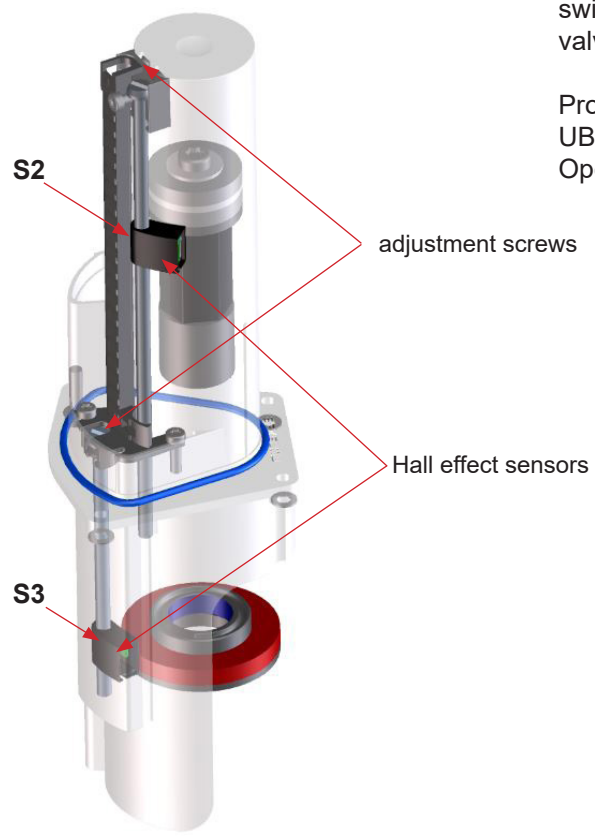

7.4. Use of external sensor

Instead of the internal Hall effect sensors, also 2 external proximity switches can be connected to the CU4 DC, e.g. for the valve position indication at double seat valves.

Proximity switch: H208844
UB 4,75-5,25 VDC
Operating distance according to SPX FLOW specification

8. CU Assembly and Startup

8.1. Valves with turning actuator, e.g. butterfly valves

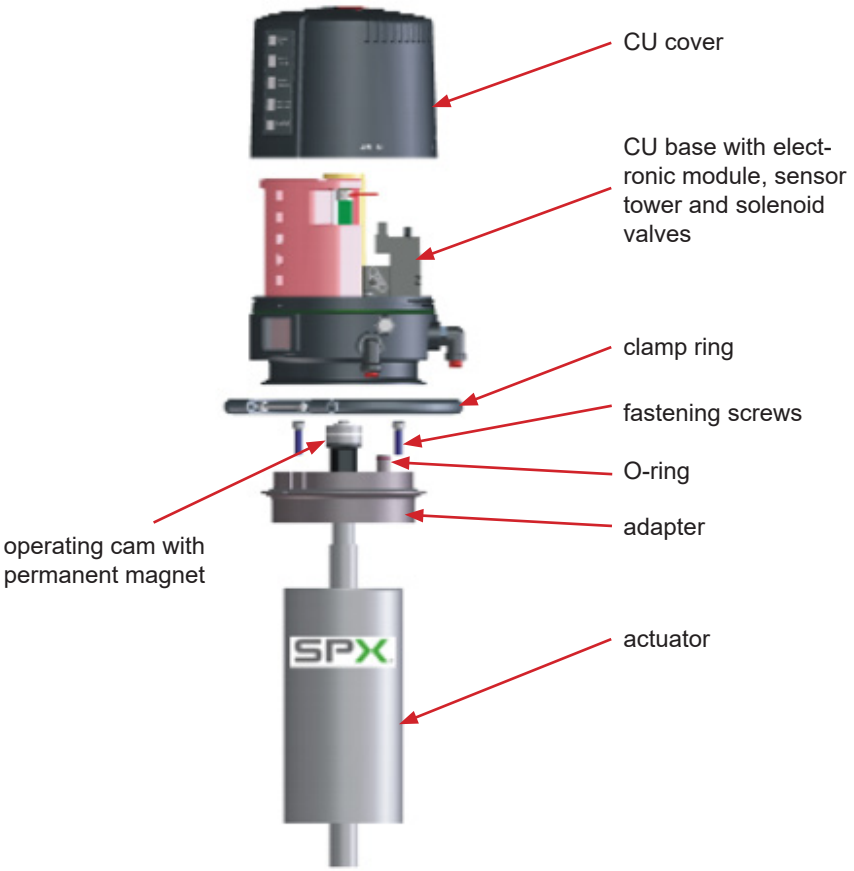

Caution!
The permanent magnet is made of fragile material and must be protected against mechanical load . – Risk of fracture!
The magnetic fields can damage or delete data carrier or influence electronic and mechanic components.

Assembly of the Control Unit on the valve

1. Assembly of the adapter on the turning actuator.
   Fasten with 3 screws.
   See to the right positioning of the O-rings on the lower side of the adapter and in the groove of the air transfer stud.
2. Install operating cam with shaft rod prolongation.
   Secure with Loctite semi-solid and fasten it.
3. Place the control unit via the operating cam onto the adapter.
   Observe alignment!
4. Attach the clamp rings and fasten them with the screws.

8. CU Assembly and Startup

8.1.1. Pneumatic connection

Supply air:



Caution!
Shut off the compressed air supply before connecting the air hose! Make sure that the air hose is professionally cut to length. Use a hose cutter for this purpose.

Pneumatic air for valve actuator:
For the assembly of the control unit on the turning actuator with integrated air transfer, air hosing between the control unit and the actuator is not required.

Exhaust air:
As a standard, the exhaust air connection is equipped with a silencer. If required, the silencer can be removed and the exhaust air can be hosed separately when it must be led off to the exterior, for example.

8.1.2. Electric connection



Attention!
Electric connections shall only be carried out by qualified personnel!

Make sure that the operating voltage is correct!

After determining the connecting variant according to chapter 6.6. Wiring Examples, select the corresponding cable.

Guide the cable through the cable gland and connect it according to the Wiring Diagram. Preferably use wire terminations!

Tighten the cable gland in order to ensure the corresponding protective class.

8. CU Assembly and Startup

8.1.3 Startup

After proper assembly and installation of the control unit, start-up can be undertaken as described below:

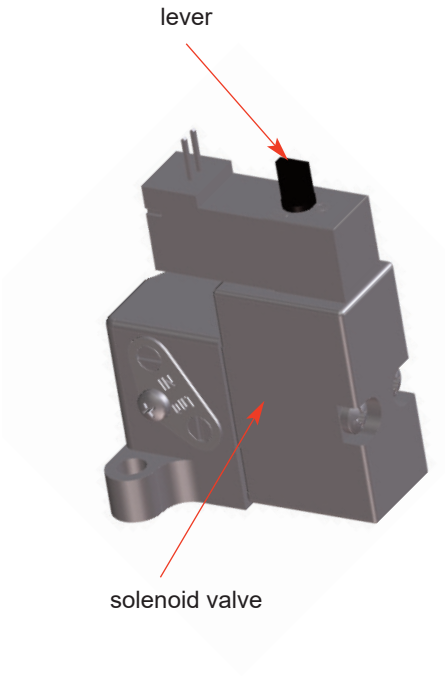

1. Switch on the air supply.
2. Switch on the voltage supply.
3. Check the solenoid valves by turning the handle on the upper side of the valve by 90°.
4. Check the valve position indicator and adjust feedbacks for **open** and **closed** valve position as described below.

For valves in normally closed (air-to-raise, spring-to-lower) /normally open (air-to-lower, spring-to-raise) design with turning actuator, the following allocation applies:

Closed valve position feedback – sensor 1 controlled

For the adjustment, Hall sensor 1 with non-controlled (controlled) solenoid valve 1 is moved into the required position by turning the adjustment screw 1. The **LED Valve Closed** lights up.

Open valve position feedback – sensor 2 controlled

For the adjustment of Hall sensor 2, at first, the (non-controlled) solenoid valve 1 is controlled. This can optionally be made manually or electrically. The open valve position and the corresponding feedback can be adjusted. This is undertaken by turning the adjustment screw 2 until the required position is reached and the **LED Valve Open** lights up.



Observe the switching hysteresis of the Hall effect sensors! Therefore, adjust the switch-point of the sensors with overlap in order to permit small variations and, thus, to prevent failures!

8. CU Assembly and Startup

8.2. Single seat valves

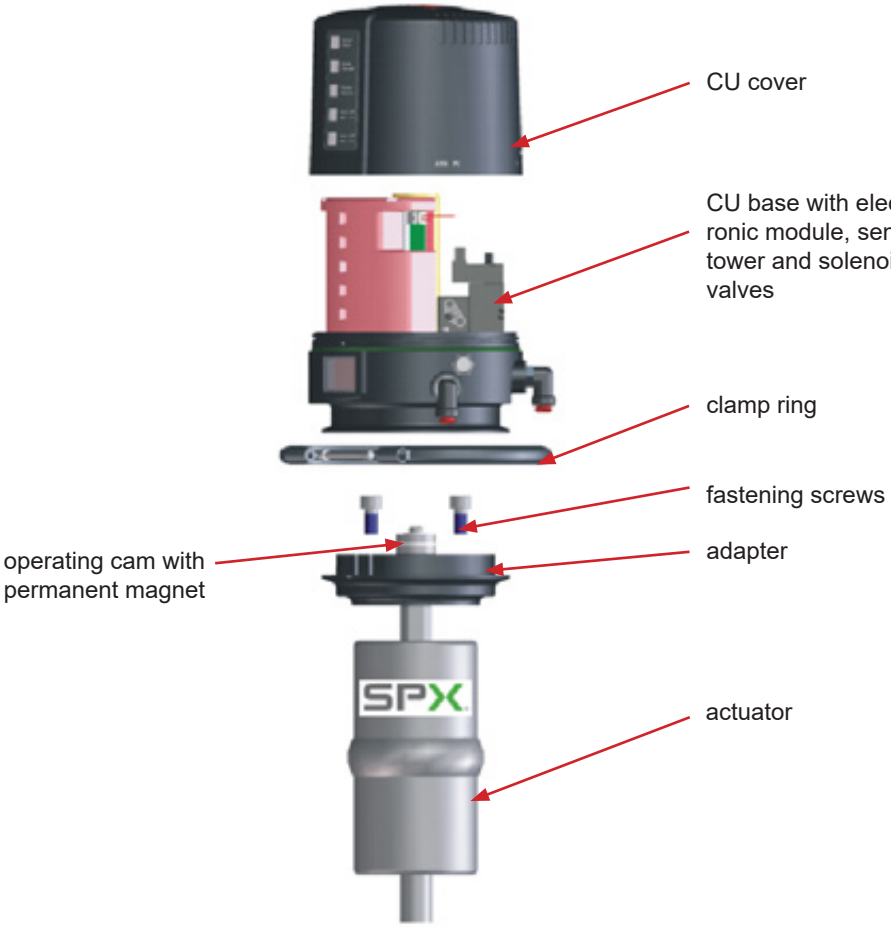

CAUTION!
The permanent magnet is made of fragile material and must be protected against mechanical load . – Risk of fracture!
The magnetic fields can damage or delete data carrier or influence electronic and mechanic components.

Assembly of the Control Unit on the valve

1. Assembly of the adapter on the single seat valve.
   Fasten with 4 screws.
2. Secure operating cam with Loctite semi-solid and fasten it.
3. Place the control unit via the operating cam onto the adapter.
   Observe alignment.
4. Attach the clamp rings and fasten them with the screws.

8. CU Assembly and Startup

8.2.1. Pneumatic connection

Supply air:



Caution!
Shut off the compressed air supply before connecting the air hose!

Make sure that the air hose is professionally cut to length. Use a hose cutter for this purpose.

Pneumatic air for valve actuator:
Connect the pneumatic air connection Y1 with the valve actuator.

- For the CU41N **(with logic NOT element)**, the pneumatic air connection **N** must be connected with the spring side of the actuator.

  Take note of the spring side of the actuator during the assembly of the pressure-reducing valve.

Exhaust air:
As a standard, the exhaust air connection is equipped with a silencer. If required, the silencer can be removed and the exhaust air can be hosed separately when it must be led off to the exterior, for example.

8.2.2. Electric connection



Attention!
Electric connections shall only be carried out by qualified personnel.

Make sure that the operating voltage is correct!

After determining the connecting variant according to chapter 6.6 Wiring Examples, select the corresponding cable.

Guide the cable through the cable gland and connect it according to the Wiring Diagram. Preferably use wire terminations!
Tighten the cable gland in order to ensure the corresponding protective class.

8. CU Assembly and Startup

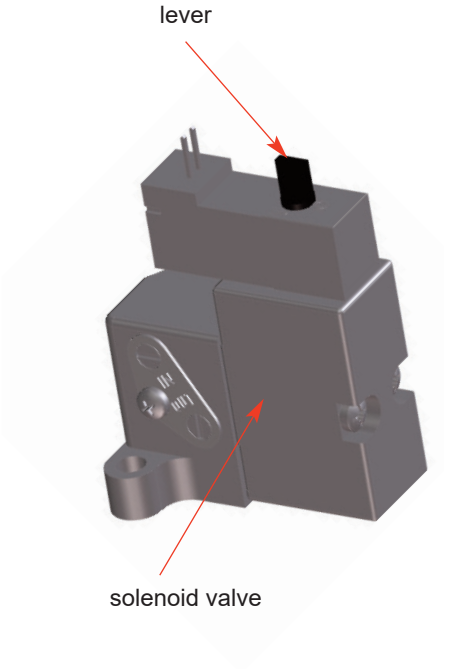

8.2.3. Startup

After proper assembly and installation of the control unit, start-up can be undertaken as described below:

1. Switch on the air supply
2. Switch on the voltage supply.
3. Check the solenoid valves by turning the handle on the upper side of the valve by 90°.
4. Check the valve position indicator and adjust feedbacks for **open** and **closed** valve position as described below.

For single seat valves in normally closed (normally open) the following allocation applies:

Closed valve position feedback – sensor 1 controlled

For the adjustment, Hall sensor 1 with non-controlled (controlled) solenoid valve 1 is moved into the required position by turning the adjustment screw 1. The **LED Valve Closed** lights up.

Open valve position feedback – sensor 2 controlled

For the adjustment of Hall sensor 2, at first, the (non-controlled) solenoid valve 1 is controlled. This can optionally be made manually or electrically. The open valve position and the corresponding feedback can be adjusted. This is undertaken by turning the adjustment screw 2 until the required position is reached and the **LED Valve Open** lights up.



Observe the switching hysteresis of the Hall effect sensors! Therefore, adjust the switch-point of the sensors with overlap in order to permit small variations and, thus, to prevent failures!

8. CU Assembly and Startup

8.3. Double seat mix proof valves DE3, DA3+

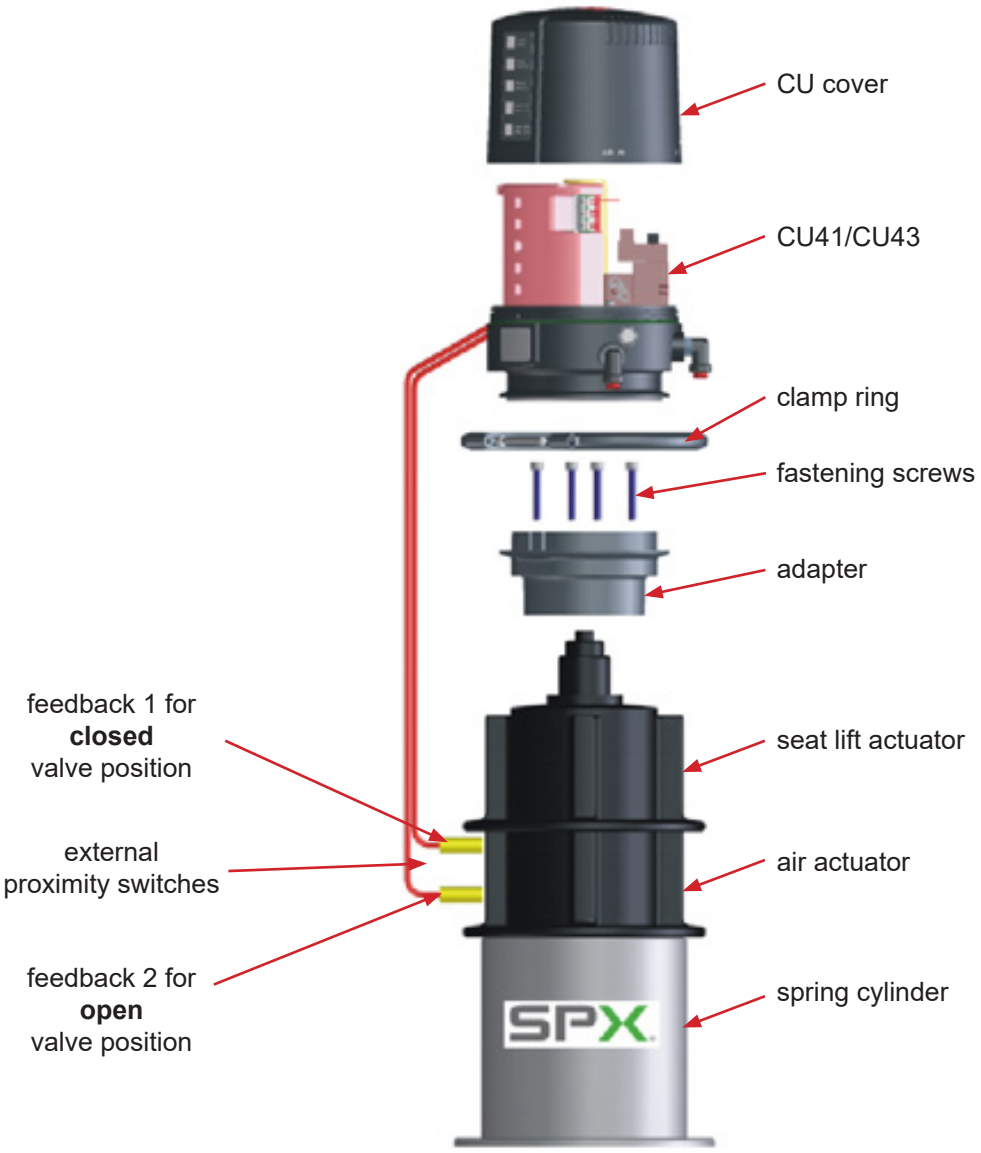

Assembly of the Control Unit on the valve

1. Assembly of the adapter on the double seat valve. Fasten with 4 screws.
2. Align air connections of the control unit to the valve actuator.
3. Place the control unit onto the adapter. Observe alignment!
4. Attach the clamp rings and fasten them with the screws.
5. Assemble the external proximity switches at the actuator.

8. CU Assembly and Startup

8.3.1. Pneumatic connection

Supply air:



Caution !
Shut off the compressed air supply before connecting the air hose!

Make sure that the air hose is professionally cut to length. Use a hose cutter for this purpose.

Pneumatic air to valve actuator:
Connect pneumatic air connection **Y1** with the valve actuator. Main actuator



Connect pneumatic air connection **Y2** with the valve actuator. (seat lifting - upper valve seat)



Connect pneumatic air connection **Y3** with the valve actuator. (seat lifting – lower valve seat)



Exhaust air:
As a standard, the exhaust air connections **A1** and **A2** are equipped with a silencer. If required, the silencer can be removed and the exhaust air can be hosed separately when it must be led off to the exterior, for example.

8.3.2 Electric connection



Attention!
Electric connections shall only be carried out by qualified personnel!

Make sure that the operating voltage is correct!

After determining the connecting variant according to chapter 6.6. Wiring Examples, select the corresponding cable.

Guide the cable through the cable gland and connect it according to the Wiring Diagram. Preferably use wire terminations!

Tighten the cable gland in order to ensure the corresponding protective class.

8. CU Assembly and Startup

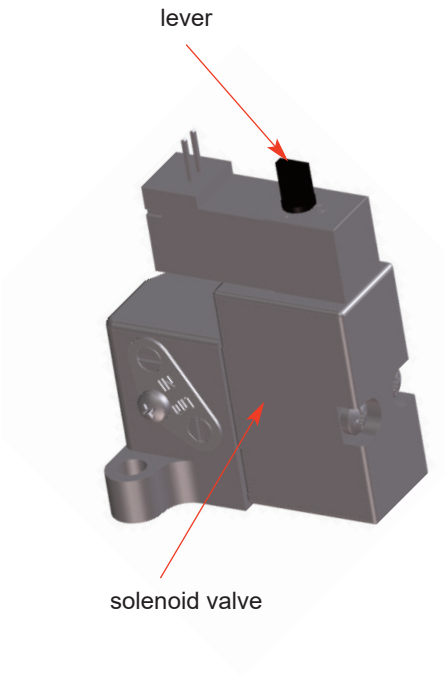

8.3.3 Connection of external proximity switches

The electric connection of the proximity switches specified by SPX FLOW is undertaken according to the terminal layout described in chapter 6.1.
The mechanic assembly of the proximity switches is carried out at the actuator of the corresponding double seat valves.
Observance of the instruction manual for double seat valves is essential!

8.3.4 Startup

After proper assembly and installation of the control unit, start-up can be undertaken as described below

1. Switch on the air supply
2. Switch on the voltage supply.
3. Check the solenoid valves by turning the handle on the upper side of the valve by 90°.
4. Check the valve position indicator.
   The proximity switches are installed at the double seat valves with a mechanical stop.
   Adjustment is not required!

The following allocation applies for double seat valves:

<u>Closed valve position feedback – sensor 1 controlled</u>

<u>Open valve position feedback – sensor 2 controlled</u>

Check the proper fit of the proximity switches to provide for the accurate transfer of the signals for the corresponding valve position.

8. CU Assembly and Startup

8.4. Double seat mix proof valves D4, D4 SL, DA4

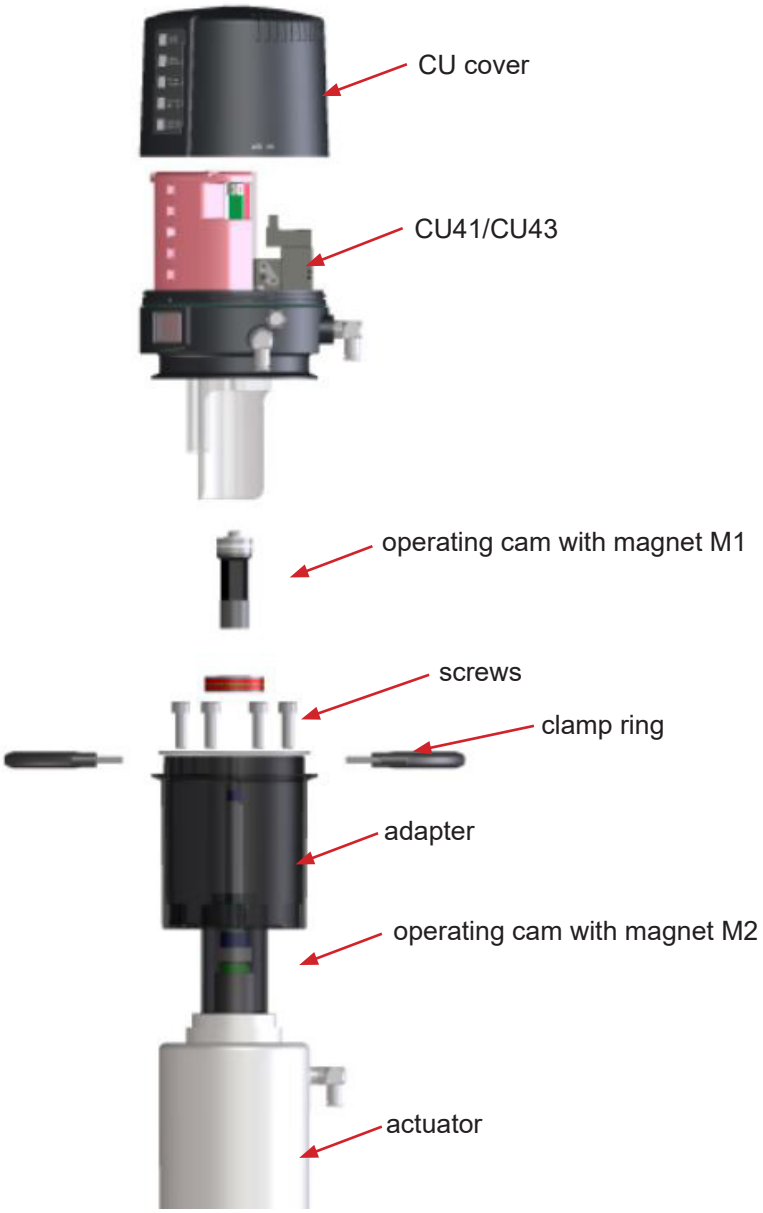

Assembly of the Control Unit on the valve

1. Assemble the magnet M2 on the upper shaft under the stop screw.
2. Assemble the adapter with the 4 screws on the double seat valve.
3. Assemble the operating cam M1 with guide rod extension on the guide rod.
4. Place the control unit onto the adapter. Observe alignment!
5. Attach the clamp rings and fasten them with the 2 screws.
6. Align air connections of the control unit to the valve actuator.

8. CU Assembly and Startup

8.4.1 Pneumatic connection

Supply air:



Caution!
Shut off the compressed air supply before connecting the air hose!

Make sure that the air hose is professionally cut to length. Use a hose cutter for this purpose.

Pneumatic air to valve actuator:
Connect pneumatic air connection **Y1** with the valve actuator. Main actuator



1

Connect pneumatic air connection **Y2** with the valve actuator. (seat lifting - upper valve seat)



2

Connect pneumatic air connection **Y3** with the valve actuator. (seat lifting – lower valve seat)



3

Exhaust air:
As a standard, the exhaust air connections **A1** and **A2** are equipped with a silencer. If required, the silencer can be removed and the exhaust air can be hosed separately when it must be led off to the exterior, for example.

8.4.2 Electric connection



Attention!
Electric connections shall only be carried out by qualified personnel!

Make sure that the operating voltage is correct!

After determining the connecting variant according to chapter 6.6. Wiring Examples, select the corresponding cable.

Guide the cable through the cable gland and connect it according to the Wiring Diagram. Preferably use wire terminations!

Tighten the cable gland in order to ensure the corresponding protective class.

8. CU Assembly and Startup

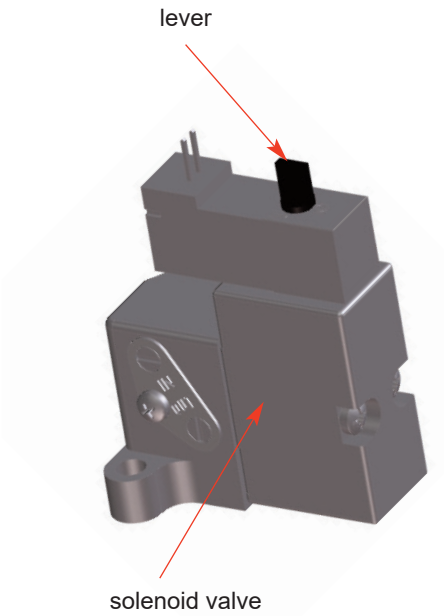

8.4.3 Connection of external proximity switches

The electric connection of the proximity switches specified by SPX FLOW is undertaken according to the terminal layout described in chapter 6.1.
The mechanic assembly of the proximity switches is carried out at the actuator of the corresponding double seat valves.
Observance of the instruction manual for double seat valves is essential!

8.4.4 Startup

After proper assembly and installation of the control unit, start-up can be undertaken as described below

1. Switch on the air supply
2. Switch on the voltage supply.
3. Check the solenoid valves by turning the handle on the upper side of the valve by 90°.
4. Check the valve position indicator.
   The proximity switches are installed at the double seat valves with a mechanical stop.
   Adjustment is not required!

The following allocation applies for double seat valves:

<u>Closed valve position feedback – sensor 3 controlled</u>

<u>Open valve position feedback – sensor 2 controlled</u>

Check the proper fit of the proximity switches to provide for the accurate transfer of the signals for the corresponding valve position.

9. Accessories and Tools

Assembly/disassembly - adapter on valve actuator:
- hexagon socket wrench 6 mm
- screwdriver 4 mm

Assembly/disassembly – CU on adapter:
- hexagon socket wrench 3 mm

Assembly/disassembly – electronic module:
- torx wrench TX20
- screwdriver 3.5 mm

Assembly/disassembly – feedback unit:
- torx wrench TX15

Assembly/disassembly – electronic modules:
- torx wrench TX20

Assembly/disassembly – air connections:
- jaw wrench M13

Assembly/disassembly – pressure relief valve:
- torx wrench TX10

Loctite semi-solid

jaw wrench



torx wrench



screwdriver



hexagon socket wrench

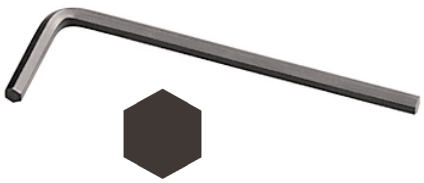

10. Service

Feedback unit for
SPX FLOW APV valves

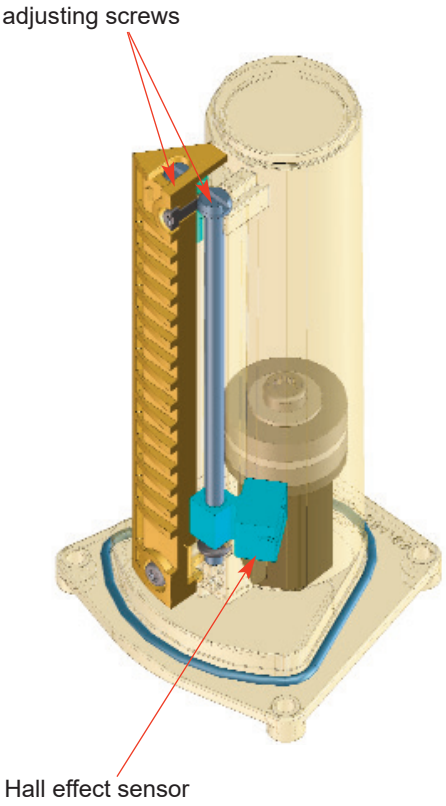

Feedback unit for
SPX FLOW APV / WCB D4 valves

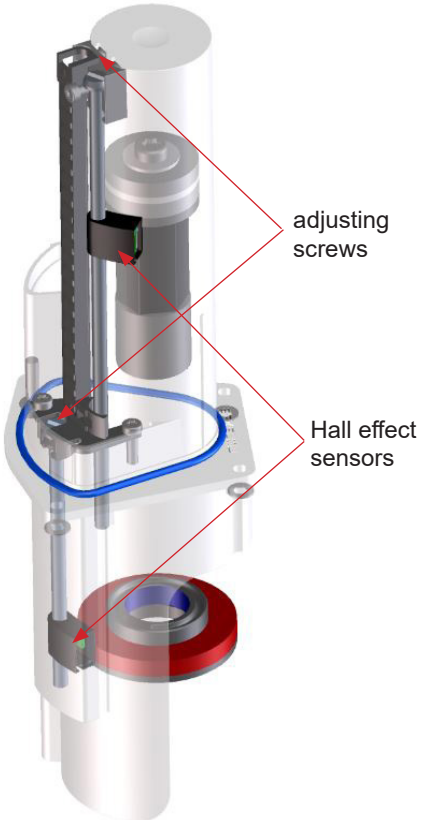

10.1. Disassembly

Before disassembly, verify the following items:

- The valve must be in safety position and must not be controlled!
- Shut off air supply!
- Cut off current to control unit, i.e. interrupt the supply voltage

Solenoid valve (4, 5, 6)

+ Open the CU cover by turning in anticlockwise direction.
+ Release the plug connection at the electronic module for the corresponding solenoid valve.
+ Release and remove the 2 screws (20) TX20.
+ Replace the solenoid valve.
+ Assembly in reverse order.
  See to a proper fit of the flat seal!

Electronic module (2)

Before releasing the cable connections make sure that all lines are switched off!

+ Open the CU cover by turning in anticlockwise direction.
+ Release the plug connection of the solenoid valves.
+ Release the cable from the terminal strip, all terminals 1-8.
+ Release and remove the 3 screws (20) TX20.
+ Replace the electronic module.
+ Assembly in reverse order.

Feedback unit

Before releasing the cable connections make sure that all lines are switched off!

+ Open the cover.
+ Release the cable for the Hall effect sensors from the terminal strip, terminals 3-8.
+ Release the clamp ring and lift the CU4 from the adapter.
+ Remove the 4 screws (9) TX15 at the lower side of the CU base (1).
+ Take out the feedback unit to the bottom.

Hall effect sensors

The Hall effect sensors can only be replaced at the dismantled feedback unit.

+ Remove the 3 screws (14) TX10.
+ Remove the tower lid (13).
+ Remove the O-ring (11)
+ Dismantle the sensors by turning the adjusting screw (12).

To simplify adjustment of feedbacks:

+ Mark the position of the sensor on the adjusting screw!
+ Assembly in reverse order.
+ Check the correct position of the Hall effect sensors and their functions as described in **chapter 8** „CU assembly and start-up“.

11. Trouble Shooting

General Failures	Remedy
Valve position is not indicated.	Re-adjust Hall sensors.
	Check fastening of magnetic operating cam.
	Check cabeling of the Hall sensors to the electronic module.
Feedback via proximity switches is missing	Check positioning of proximity switches.
	Check operating voltage.
	Check cabeling to the electronic module.
LED indication is missing	Check operating voltage.
	Check cabeling to the electronic module.

Failure	Remedy
Control Unit CU41 installed on Butterfly valves	
Movement of valve flap is missing with actuated solenoid valve.	Check if right control unit is installed. Check label in type window of control unit: **CU41-T-Direct Connect (1 EMV/solenoid valve)**
	Check valve movement with manual at solenoid valve.
	Check cabeling between electronic module and solenoid valve.
	Check compressed air (min. 6 bar).
	Bore for transfer of control air to turning actuator must be open.
Air leakage at lower side of adapter.	Check o-rings of adapter.

11. Trouble Shooting

Failure	Remedy
Control Unit CU41 installed on Single seat and Double seat valves	
Valve position movement is missing with actuated solenoid valve.	Check if right control unit is installed. Check label in type window of control unit: **CU41-S-Direct Connect (1 EMV/solenoid valve)** **CU41-M-Direct Connect** **CU41-D4-Direct Connect**
	Check valve movement with manual lever at solenoid valve.
	Check cabeling between electronic module and solenoid valve.
	Check compressed air (min. 6 bar).
	Check control air connection between the CU41 and the valve actuator.
Control Unit CU43 installed on Double seat valves	
Valve position movement is missing with actuated solenoid valve.	Check if right control unit is installed. Check label in type window of control unit: **CU43-M-Direct Connect (3 EMV/solenoid valves)** **CU43-D4-Direct Connect**
	Check valve movement with manual lever at solenoid valve.
	Check cabeling between electronic module and solenoid valve.
	Check compressed air (min. 6 bar).
	Check control air connection between the CU43 and the DA3 / DA4 / D4 SL actuator.

12. Spare Parts Lists

The reference numbers of spare parts for the different control unit designs and adapters are included in the attached spare parts drawings with corresponding lists.

CU4 Direct Connect	**RN 01.044.4**
CU4 Adapter	**RN 01.044.3**

When you place an order for spare parts, please indicate the following data:

- number of parts required
- reference number
- parts designation

Data are subject to change.

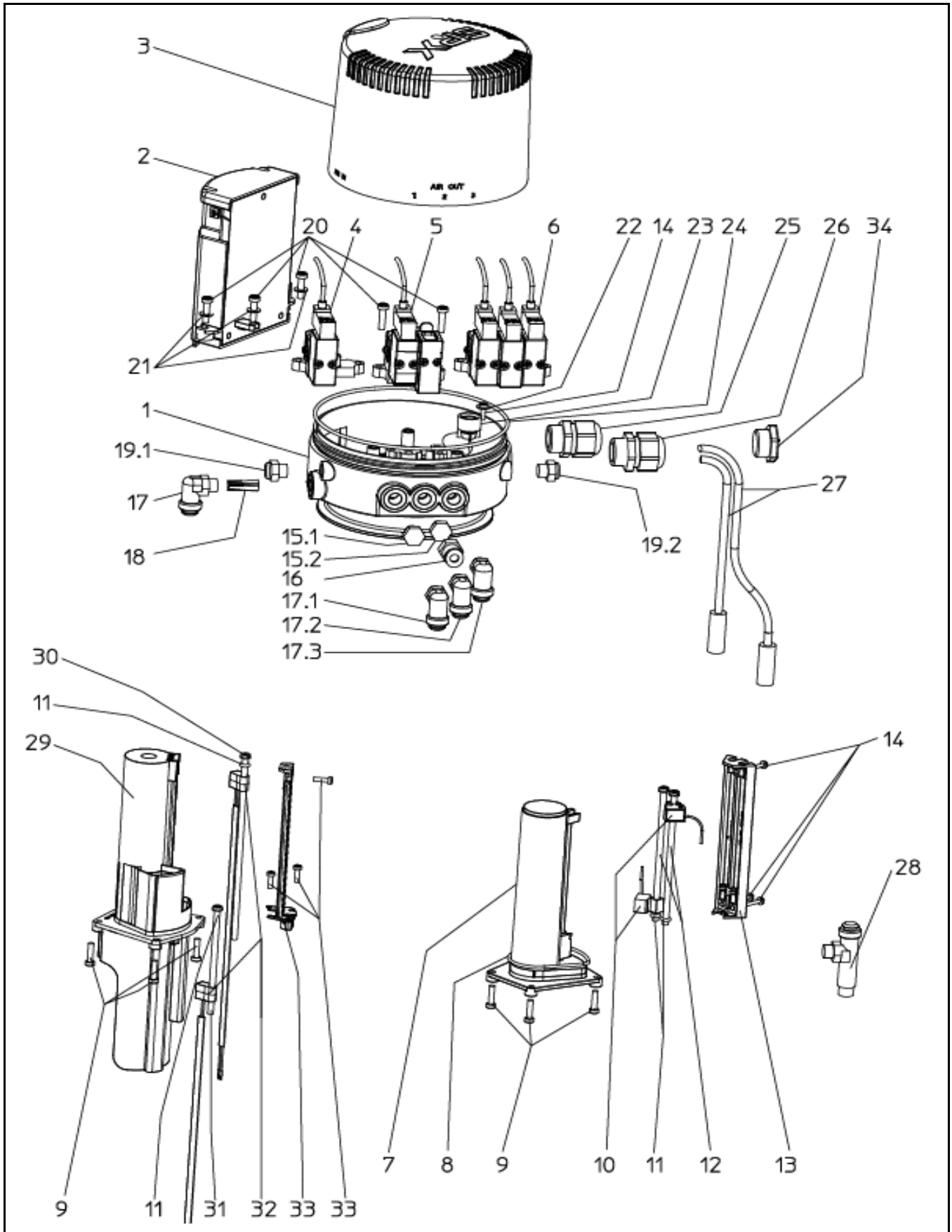

Datum:	07/08	08/08	11/08	02/10	06/10	04/18				
Name:	Peters	Peters	Peters	Peters	D.Schulz	C.Keil				
Geprüft:				D.Schulz	D.Schulz					

Ersatzteilliste: spare parts list

CU4 Direct Connect

SPX FLOW
Germany

Blatt 1 von 7

RN 01.044.4

Weitergabe sowie Vervielfältigung dieser Unterlage, Verwertung und Mitteilung ihres Inhalts nicht gestattet, soweit nicht schriftlich zugestanden. Verstoß verpflichtet zum Schadensersatz und kann strafrechtliche Folgen haben (Paragraph 18 UWG, Paragraph 106 UrhG). Eigentum und alle Rechte, auch für Patenterteilung und Gebrauchsmustereintragung, vorbehalten. SPX FLOW, Germany

Weitergabe sowie Vervielfältigung dieser Unterlage, Verwertung und Mitteilung
ihres Inhalts nicht gestattet, soweit nicht schriftlich zugestanden. Verstoß
verpflichtet zum Schadensersatz und kann strafrechtliche Folgen haben
(Paragraph 18 UWG, Paragraph 106 UrhG). Eigentum und alle Rechte, auch
für Patenterteilung und Gebrauchsmustereintragung, vorbehalten. SPX FLOW, Germany

Ersatzteilliste: spare parts list

CU4 Direct Connect

Datum:	07/08	08/08	11/08	02/10
Name:	Peters	Peters	Peters	Peters
Geprüft:				D.Schulz

Datum:	06/10	01/11	10.01.13	04/18
Name:	D.Schulz	D.Schulz	Trytko	C.Keil
Geprüft:				

APV
SPX FLOW
Germany

RN 01.044.4

pos. item	Menge quantity	Beschreibung description	Material material	CU41-S WS-Nr. ref.-no.	CU41-T WS-Nr. ref.-no.	CU41-M WS-Nr. ref.-no.	CU41N-S WS-Nr. ref.-no.	CU41N-T WS-Nr. ref.-no.	CU43-M WS-Nr. ref.-no.
		CU4 Direct Connect kpl. (6x1) CU4 Direct Connect cpl. (6x1)		08-45-100/93 H320460	08-45-101/93 H320461	08-45-102/93 H320462	08-45-103/93 H320463	08-45-104/93 H320464	08-45-105/93 H320465
		CU4 Direct Connect kpl. (1/4"OD) CU4 Direct Connect cpl. (1/4"OD)		08-45-120/93 H322802	08-45-121/93 H322803	08-45-122/93 H322804	08-45-123/93 H322805	08-45-124/93 H322806	08-45-125/93 H322807
1	1	CU4 Base CU4 base	PA6.6 GF30	08-46-552/93 H319853	08-46-553/93 H319854	08-46-554/93 H319855	08-46-552/93 H319853	08-46-553/93 H319854	08-46-556/93 H319857
2	1	CU4 E-Modul Direct Connect * CU4 e-module Direct Connect *		08-46-670/33 H327194					08-46-695/93 H330583
2.1	1	CU4 E-Modul DC kpl. (Version 2) 6x1 *** inkl. Label für Ventiltyp CU4 e-module DC cpl. (version 2) 6x1 *** incl. label for valve type		08-46-690/93 H330578	08-46-691/93 H330579	08-46-692/93 H330580	08-46-693/93 H330581	08-46-694/93 H330582	08-46-695/93 H330583
2.2	1	CU4 E-Modul DC kpl. (Version 2) 1/4"OD *** inkl. Label für Ventiltyp CU4 e-module DC cpl. (version 2) 1/4"OD *** incl. label for valve type		08-46-700/93 H330584	08-46-701/93 H330585	08-46-702/93 H330586	08-46-703/93 H330587	08-46-704/93 H330588	08-46-705/93 H330589
3	1	CU4 Haube kpl. CU4 cover cpl.	PA6.6 GF30	08-46-659/93 H325602					
4	1	Magnetventilblock 1 EMV Solenoid valve 1 solenoid	PPS	08-46-578/93 H319950			----- -----		
5	1	Magnetventilblock 1 EMV + NOT-Element Solenoid valve 1 solenoid + NOT element	PPS	----- -----			08-46-579/93 H319951		----- -----
6	1	Magnetventilblock 3 EMV Solenoid valve 3 solenoids	PPS	----- -----					08-46-580/93 H319952
7	1	CU4 Sensortower CU4 sensor tower	PA12	08-46-564/93 H319868					
8	1	O-Ring 45,6 x 2,4 O-ring 45,6 x 2,4	NBR	58-06-218/83 H320401					
9	4	Ejot Delta PT Schraube WN5452 35x14 Ejot Delta PT screw WN5452 35x14	A2	65-17-122/13 H320364					
10	2	Hall-Sensor Hall sensor		08-46-581/93 H320385		----- -----	08-46-581/93 H320385		----- -----

Weitergabe sowie Vervielfältigung dieser Unterlage, Verwertung und Mitteilung ihres Inhalts nicht gestattet, soweit nicht schriftlich zugestanden. Verstoß verpflichtet zum Schadensersatz und kann strafrechtliche Folgen haben (Paragraph 18 UWG, Paragraph 106 UrhG). Eigentum und alle Rechte, auch für Patenterteilung und Gebrauchsmustereintragung, vorbehalten. SPX FLOW, Germany

Ersatzteilliste: spare parts list

CU4 Direct Connect

Datum:	07/08	08/08	11/08	02/10
Name:	Peters	Peters	Peters	Peters
Geprüft:				D.Schulz

Datum:	06/10	01/11	04/18	
Name:	D.Schulz	D.Schulz	C.Keil	
Geprüft:				

APV
SPX FLOW
Germany

RN 01.044.4

pos. item	Menge quantity	Beschreibung description	Material material	CU41-S WS-Nr. ref.-no.	CU41-T WS-Nr. ref.-no.	CU41-M WS-Nr. ref.-no.	CU41N-S WS-Nr. ref.-no.	CU41N-T WS-Nr. ref.-no.	CU43-M WS-Nr. ref.-no.
11	2	O-Ring 3x2 O-ring 3x2	NBR	58-06-043/83 H208644		----- -----	58-06-043/83 H208644		----- -----
12	2	Zyl.-Schraube M4x100 Cyl. screw M4x100	A2-50	65-03-290/13 H320361		----- -----	65-03-290/13 H320361		----- -----
13	1	CU4 Towerabdeckung CU4 tower cover	PA12	08-46-565/93 H319869		----- -----	08-46-565/93 H319869		----- -----
14	4	Ejot Delta PT Schraube WN5452 30x10 Ejot Delta PT screw WN5452 30x10	A2	65-17-110/13 4 x H320363					
15.1	1	Blindstopfen G1/8" Plug G1/8"	Ms / vern.	----- -----	08-60-051/99 H320482	----- -----	----- -----	08-60-051/99 H320482	----- -----
15.2	1	Blindstopfen G1/8" Plug G1/8"	Ms / vern.	08-60-051/99 H320482			----- -----		
16	1	Verschraubung selbstabsperrend Connector self-locking	Ms / vern.	----- -----			08-63-241/99 H320551		----- -----
17.1	1	W-Verschraubung G1/8" 6x1 Elbow connector G1/8" 6x1	1.4301 / PA	08-60-750/93 H208825					
		W-Verschraubung G1/8" 1/4"OD Elbow connector G1/8" 1/4" OD	1.4301 / PA	08-60-811/93 H312732					
17.1	1	W-Verschraubung G1/8" 6x1 Elbow connector G1/8" 6x1	1.4301 / PA	08-60-750/93 H208825	----- -----	08-60-750/93 H208825		----- -----	08-60-750/93 H208825
		W-Verschraubung G1/8" 1/4"OD Elbow connector G1/8" 1/4" OD	1.4301 / PA	08-60-811/93 H312732	----- -----	08-60-811/93 H312732		----- -----	08-60-811/93 H312732
17.2	1	W-Verschraubung G1/8" 6x1 Elbow connector G1/8" 6x1	1.4301 / PA	----- -----					08-60-750/93 H208825
		W-Verschraubung G1/8" 1/4"OD Elbow connector G1/8" 1/4" OD	1.4301 / PA	----- -----					08-60-811/93 H312732
17.3	1	W-Verschraubung G1/8" 6x1 Elbow connector G1/8" 6x1	1.4301 / PA	----- -----					08-60-750/93 H208825
		W-Verschraubung G1/8" 1/4"OD Elbow connector G1/8" 1/4" OD	1.4301 / PA	----- -----					08-60-811/93 H312732
18	1	CU4 Luftfilter CU4 air filter	PE-porös	08-10-005/93 H320223					

Weitergabe sowie Vervielfältigung dieser Unterlage, Verwertung und Mitteilung
ihres Inhalts nicht gestattet, soweit nicht schriftlich zugestanden. Verstoß
verpflichtet zum Schadensersatz und kann strafrechtliche Folgen haben
(Paragraph 18 UWG, Paragraph 106 UrhG). Eigentum und alle Rechte, auch
für Patenterteilung und Gebrauchsmustereintragung, vorbehalten. SPX FLOW, Germany

Ersatzteilliste: spare parts list

CU4 Direct Connect

Datum:	07/08	08/08	11/08	02/10
Name:	Peters	Peters	Peters	Peters
Geprüft:				D.Schulz

Datum:	06/10	01/11	10.01.13	04/18
Name:	D.Schulz	D.Schulz	Trytko	C.Keil
Geprüft:				

APV SPX FLOW Germany

RN 01.044.4

pos. item	Menge quantity	Beschreibung description	Material material	CU41-S WS-Nr. ref.-no.	CU41-T WS-Nr. ref.-no.	CU41-M WS-Nr. ref.-no.	CU41N-S WS-Nr. ref.-no.	CU41N-T WS-Nr. ref.-no.	CU43-M WS-Nr. ref.-no.
19.1	1	Schalldämpfer Silencer	Ms / vern.	08-60-751/93 H208826					
19.2	1	Schalldämpfer Silencer	Ms / vern.	----- -----					08-60-751/93 H208826
20	5	Ejot Delta PT Schraube WN5452 40x16 Ejot Delta PT screw WN5452 40x16	A2	65-17-131/13 H320365					
21	3	Scheibe ø4,3 DIN125 Washer ø4,3 DIN125	A2	67-01-003/13 H79576					
22	1	Scheibe A 3,2 DIN9021 Washer A 3,2 DIN9021	A2	67-01-001/12 H320404					
23	1	CU4 Überströmventil CU4 pressure relief valve	PPS	08-46-037/93 H320352					
24	1	O-Ring 120,32 x 2,62 O-ring 120,32 x 2,62	NBR	58-06-583/83 H320402					
25	1	Kabelverschraubung M20x1,5 Kabelø 6-12 Cable gland M20x1,5 cable ø 6-12	PA	08-46-042/93 H323199					
26	1	Kabelverschraubung M20x1,5 Kabel 2x ø5 Cable gland M20x1,5 cable 2x ø5	PA	----- -----		08-46-040/93 H320371	----- -----		08-46-040/93 H320371
27	2	Initiator Ni5 K11K-AN 5X/5 Proximity switch Ni5 K11K-AN 5X/5		----- -----		08-60-769/93 H208844	----- -----		08-60-769/93 H208844
28	1	Druckreduzierventil Pressure reducing valve	Ms / vern.	----- -----			08-60-766/93 H208841		----- -----

* gültig bis 12/2010 -- valid until 12/2010 — Without specific valve sticker. Please order Pos.2.1 or 2.2 for replacement, check the sticker on the currently installed E-module to choose the correct Control unit version.

*** gültig ab 01/2013 -- valid from 01/2013 — You also need to order pos.3 if your Control Unit / Valve was shipped before 1.1.2010

Weitergabe sowie Vervielfältigung dieser Unterlage, Verwertung und Mitteilung ihres Inhalts nicht gestattet, soweit nicht schriftlich zugestanden. Verstoß verpflichtet zum Schadensersatz und kann strafrechtliche Folgen haben (Paragraph 18 UWG, Paragraph 106 UrhG). Eigentum und alle Rechte, auch für Patenterteilung und Gebrauchsmustereintragung, vorbehalten. SPX FLOW, Germany

Ersatzteilliste: spare parts list

CU4 Direct Connect

Datum:	05.04.18			
Name:	C.Keil			
Geprüft:				

Datum:				
Name:				
Geprüft:				

SPX FLOW Germany

RN 01.044.4

pos. item	Menge quantity	Beschreibung description	Material material	CU41-D4 WS-Nr. ref.-no.	CU43-D4 WS-Nr. ref.-no.	WS-Nr. ref.-no.	WS-Nr. ref.-no.	WS-Nr. ref.-no.	WS-Nr. ref.-no.
		CU4 Direct Connect kpl. (6x1) CU4 Direct Connect cpl. (6x1)		08-45-380/93 H336954	08-45-381/93 H336955				
		CU4 Direct Connect kpl. (1/4"OD) CU4 Direct Connect cpl. (1/4"OD)		08-45-430/93 H336959	08-45-431/93 H336960				
1	1	CU4 Base CU4 base	PA6.6 GF30	08-46-552/93 H319853	08-46-556/93 H319857				
2	1	CU4 E-Modul Direct Connect CU4 e-module Direct Connect		08-46-670/93 H327194	08-46-695/93 H330583				
2.1	1	CU4 E-Modul DC kpl. (Version 2) 6x1 inkl. Label für Ventiltyp CU4 e-module DC cpl. (version 2) 6x1 incl. label for valve type							
2.2	1	CU4 E-Modul DC kpl. (Version 2) 1/4"OD inkl. Label für Ventiltyp CU4 e-module DC cpl. (version 2) 1/4"OD incl. label for valve type							
3	1	CU4 Haube kpl. CU4 cover cpl.	PA6.6 GF30	08-46-659/93 H325602					
4	1	Magnetventilblock 1 EMV Solenoid valve 1 solenoid	PPS	08-46-578/93 H319950					
6	1	Magnetventilblock 3 EMV Solenoid valve 3 solenoids	PPS	----- -----	08-46-580/93 H319952				
7	1	CU4 Sensortower CU4 sensor tower	PA12	----- -----					
8	1	O-Ring 45,6 x 2,4 O-ring 45,6 x 2,4	NBR	58-06-218/83 H320401					
9	4	Ejot Delta PT Schraube WN5452 35x14 Ejot Delta PT screw WN5452 35x14	A2	65-17-122/13 H320364					
10	0	Hall-Sensor Hall sensor		----- -----					
11	2	O-Ring 3x2 O-ring 3x2	NBR	58-06-043/83 H208644					

Weitergabe sowie Vervielfältigung dieser Unterlage, Verwertung und Mitteilung ihres Inhalts nicht gestattet, soweit nicht schriftlich zugestanden. Verstoß verpflichtet zum Schadensersatz und kann strafrechtliche Folgen haben (Paragraph 18 UWG, Paragraph 106 UrhG). Eigentum und alle Rechte, auch für Patenterteilung und Gebrauchsmustereintragung, vorbehalten. SPX FLOW, Germany

Ersatzteilliste: spare parts list

CU4 Direct Connect

Datum:	05.04.18			
Name:	C.Keil			
Geprüft:				

Datum:				
Name:				
Geprüft:				

SPX FLOW Germany

RN 01.044.4

pos. item	Menge quantity	Beschreibung description	Material material	CU41-D4 WS-Nr. ref.-no.	CU43-D4 WS-Nr. ref.-no.	WS-Nr. ref.-no.	WS-Nr. ref.-no.	WS-Nr. ref.-no.	WS-Nr. ref.-no.
12	0	Zyl.-Schraube M4x100 Cyl. screw M4x100	A2-50	-----					
13	0	CU4 Towerabdeckung CU4 tower cover	PA12	-----					
14	4	Ejot Delta PT Schraube WN5452 30x10 Ejot Delta PT screw WN5452 30x10	A2	65-17-110/13 H320363					
15.1	1	Blindstopfen G1/8" Plug G1/8"	Ms / vern.						
15.2	1	Blindstopfen G1/8" Plug G1/8"	Ms / vern.	08-60-051/99 H320482					
16	1	Verschraubung selbstabsperrend Connector self-locking	Ms / vern.	-----					
17	1	W-Verschraubung G1/8" 6x1 Elbow connector G1/8" 6x1	1.4301 / PA	08-60-750/93 H208825					
		W-Verschraubung G1/8" 1/4"OD Elbow connector G1/8" 1/4" OD	1.4301 / PA	08-60-811/93 H312732					
17.1	1	W-Verschraubung G1/8" 6x1 Elbow connector G1/8" 6x1	1.4301 / PA	08-60-750/93 H208825					
		W-Verschraubung G1/8" 1/4"OD Elbow connector G1/8" 1/4" OD	1.4301 / PA	08-60-811/93 H312732					
17.2	1	W-Verschraubung G1/8" 6x1 Elbow connector G1/8" 6x1	1.4301 / PA	08-60-750/93 H208825					
		W-Verschraubung G1/8" 1/4"OD Elbow connector G1/8" 1/4" OD	1.4301 / PA	08-60-811/93 H312732					
17.3	1	W-Verschraubung G1/8" 6x1 Elbow connector G1/8" 6x1	1.4301 / PA	08-60-750/93 H208825					
		W-Verschraubung G1/8" 1/4"OD Elbow connector G1/8" 1/4" OD	1.4301 / PA	08-60-811/93 H312732					
18	1	CU4 Luftfilter CU4 air filter	PE-porös	08-10-005/93 H320223					
19.1	1	Schalldämpfer Silencer	Ms / vern.	08-60-751/93 H208826					

Weitergabe sowie Vervielfältigung dieser Unterlage, Verwertung und Mitteilung
ihres Inhalts nicht gestattet, soweit nicht schriftlich zugestanden. Verstoß
verpflichtet zum Schadensersatz und kann strafrechtliche Folgen haben
(Paragraph 18 UWG, Paragraph 106 UrhG). Eigentum und alle Rechte, auch
für Patenterteilung und Gebrauchsmustereintragung, vorbehalten. SPX FLOW, Germany

Ersatzteilliste: spare parts list

CU4 Direct Connect

Datum:	05.04.18			
Name:	C.Keil			
Geprüft:				

Datum:				
Name:				
Geprüft:				

SPX FLOW
Germany

RN 01.044.4

pos. item	Menge quantity	Beschreibung description	Material material	CU41-D4 WS-Nr. ref.-no.	CU43-D4 WS-Nr. ref.-no.	WS-Nr. ref.-no.	WS-Nr. ref.-no.	WS-Nr. ref.-no.	WS-Nr. ref.-no.
19.2	1	Schalldämpfer Silencer	Ms / vern.		08-60-751/93 H208826				
20	5	Ejot Delta PT Schraube WN5452 40x16 Ejot Delta PT screw WN5452 40x16	A2	65-17-131/13 H320365					
21	3	Scheibe ø4,3 DIN125 Washer ø4,3 DIN125	A2	67-01-003/13 H79576					
22	1	Scheibe A 3,2 DIN9021 Washer A 3,2 DIN9021	A2	67-01-001/12 H320404					
23	1	CU4 Überströmventil CU4 pressure relief valve	PPS	08-46-037/93 H320352					
24	1	O-Ring 120,32 x 2,62 O-ring 120,32 x 2,62	NBR	58-06-583/83 H320402					
25	1	Kabelverschraubung M20x1,5 Kabelø 6-12 Cable gland M20x1,5 cable ø 6-12	PA	08-46-042/93 H323199					
26	0	Kabelverschraubung M20x1,5 Kabel 2x ø5 Cable gland M20x1,5 cable 2x ø5	PA	----- -----					
27	2	Initiator Ni5 K11K-AN 5X/5 Proximity switch Ni5 K11K-AN 5X/5		----- -----					
28	0	Druckreduzierventil Pressure reducing valve	Ms / vern.	----- -----					
29	1	D4 Sensortower Kmpl. D4 sensor tower cmpl.	Grilamid TR55	08-46-933/93 H338146	08-46-933/93 H338146	----- -----			
30	1	Zylinder Schraube ISO 1207 M4x140 Cylinder head screw ISO 1207 M4x140	A2	65-03-294/13 H337011	65-03-294/13 H337011	----- -----			
31	1	Zylinder Schraube ISO 1207 M4x80 Cylinder head screw ISO 1207 M4x80	A2	65-03-288/13 H336896	65-03-288/13 H336896	----- -----			
32	2	CU4 Hall-Sensor D4 CU4 Hall sensor D4	Grilamid TR55	08-46-589/93 H337014	08-46-589/93 H337014	----- -----			
33	2	CU4 Hall-Sensorabdeckung D4 CU4 Hall sensor bracket D4	Grillamid TR90	08-46-932/93 H336041	08-46-932/93 H336041	----- -----			
34	1	Blindstopfen M20x1.5 Blind plug M20x1.5	PA	08-60-053/93 H324985			----- -----		

Weitergabe sowie Vervielfältigung dieser Unterlage, Verwertung und Mitteilung ihres Inhalts nicht gestattet, soweit nicht schriftlich zugestanden. Verstoß verpflichtet zum Schadensersatz und kann strafrechtliche Folgen haben (Paragraph 18 UWG, Paragraph 106 UrhG). Eigentum und alle Rechte, auch für Patenterteilung und Gebrauchsmustereintragung, vorbehalten. SPX FLOW, Germany

Ersatzteilliste: spare parts list

CU4 Adapter

Datum:	11/08	01/09	03/09	11/10	**SPX FLOW**
Name:	Peters	Peters	Trytko	Schulz	
Geprüft:	Spliethoff	Spliethoff	Peters	Spliethoff	
Datum:	03/13	11/14	05/18	03/25	Blatt 1 von 5
Name:	Trytko	Trytko	C.Keil	C.Keil	**RN 01.044.3**
Geprüft:	Schulz		C.Keil	Spliethoff	

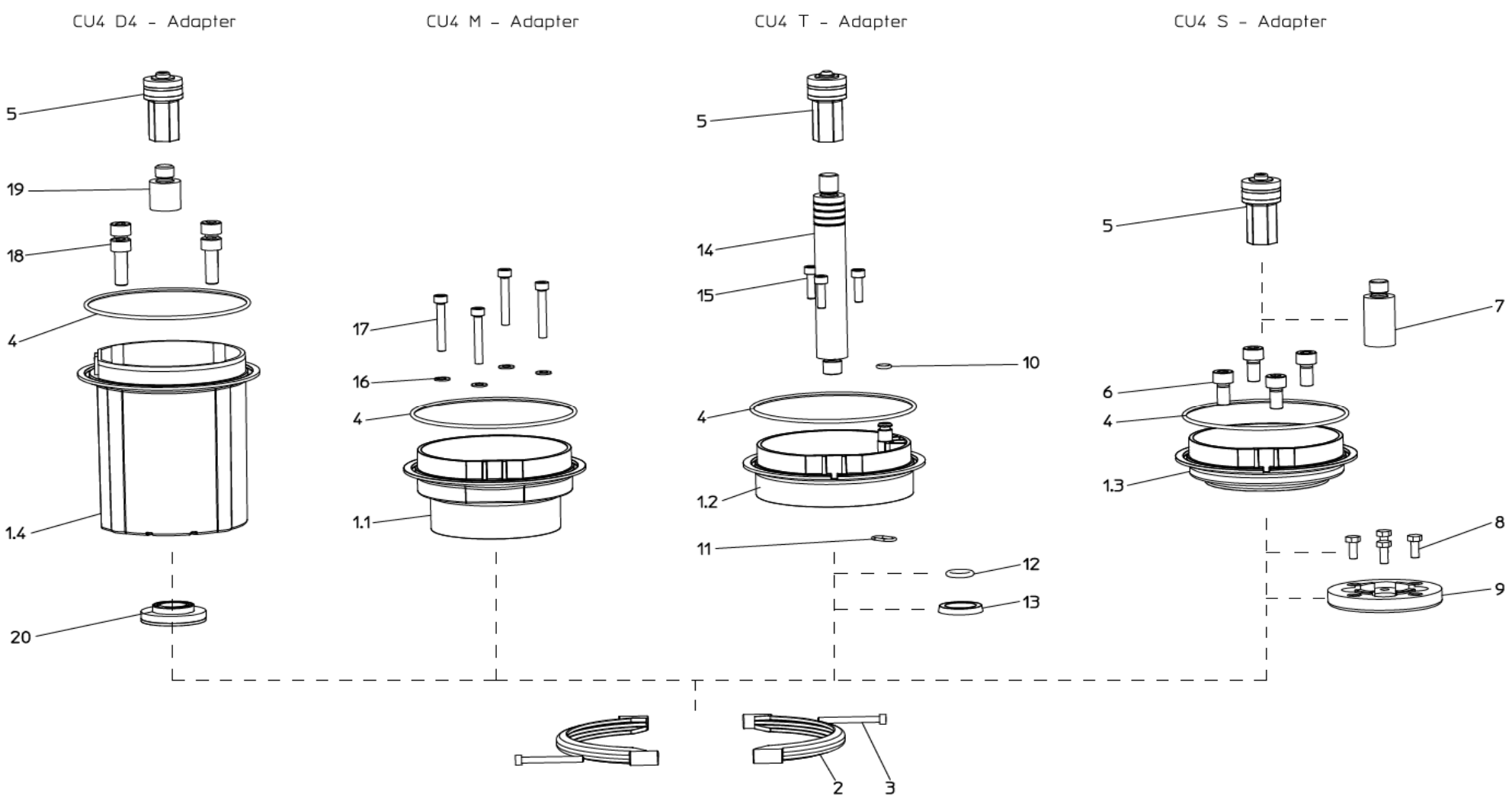

Weitergabe sowie Vervielfältigung dieser Unterlage, Verwertung und Mitteilung ihres Inhalts nicht gestattet, soweit nicht schriftlich zugestanden. Verstoß verpflichtet zum Schadensersatz und kann strafrechtliche Folgen haben (Paragraph 18 UWG, Paragraph 106 UrhG). Eigentum und alle Rechte, auch für Patenterteilung und Gebrauchsmustereintragung, vorbehalten. SPX FLOW, Germany

Ersatzteilliste: spare parts list

CU4 Adapter

Datum:	11/08	01/09	03/09	11/10
Name:	Peters	Peters	Trytko	Schulz
Geprüft:	Spliethoff	Spliethoff	Peters	Spliethoff

Datum:	03/13	11/14	05/18	03/25
Name:	Trytko	Trytko	C.Keil	C.Keil
Geprüft:	Schulz		C.Keil	Spliethoff

SPX FLOW

RN 01.044.3

pos. item	Menge quantity	Beschreibung description	Material material	CU4 - S WS-Nr. ref.-no.	CU4 - S Langhub ø165 WS-Nr. ref.-no.	CU4 - Smini WS-Nr. ref.-no.	CU4 - Smax WS-Nr. ref.-no.	CU4 - T WS-Nr. ref.-no.	CU4 - Tmax WS-Nr. ref.-no.	CU4 - M WS-Nr. ref.-no.
		CU4 Adapter kpl. CU4 adapter cpl.		08-48-600/93 H320474	08-48-633/93 H330897	08-48-613/93 H321989	08-48-610/93 H321988	08-48-601/93 H320475	08-48-611/93 H321987	08-48-602/93 H320476
1.1	1	CU4 Adapter M CU4 adapter M	PA6.6 GF30							08-46-572/93 H319876
1.2	1	CU4 Adapter T CU4 adapter T	PA6.6 GF30					08-46-571/93 H319875	08-46-571/93 H319875	
1.3	1	CU4 Adapter S CU4 adapter S	PA6.6 GF30	08-46-570/93 H319874	08-46-570/93 H319874	08-46-570/93 H319874	08-46-570/93 H319874			
1.4	0	CU4 Adapter D4 CU4 adapter D4	PA6.6 GF30							
2	2	CU4 Clamphalbschale kpl. CU4 clamp cpl.	Grivory GH-5H1	08-46-569/93 H319873	08-46-569/93 H319873	08-46-569/93 H319873	08-46-569/93 H319873	08-46-569/93 H319873	08-46-569/93 H319873	08-46-569/93 H319873
3	2	Zylinderschraube M4x40 Cyl. screw M4x40	A2-70	65-05-040/13 H320360	65-05-040/13 H320360	65-05-040/13 H320360	65-05-040/13 H320360	65-05-040/13 H320360	65-05-040/13 H320360	65-05-040/13 H320360
4	1	O-Ring 101,27x2,62 O-ring 101,27x2,62	NBR	58-06-493/83 H148389	58-06-493/83 H148389	58-06-493/83 H148389	58-06-493/83 H148389	58-06-493/83 H148389	58-06-493/83 H148389	58-06-493/83 H148389
5	1	CU4 Magnetschaltnocke kpl. CU4 magnet operating cam cpl.	Zytel HTN	08-60-900/93 H320479	08-60-900/93 H320479	08-60-900/93 H320479	08-60-900/93 H320479	08-60-900/93 H320479	08-60-900/93 H320479	
6	4	Zyl. Schraube Cyl. screw	A2-70	65-05-120/13 H79012	65-05-122/13 H79014	65-05-120/13 H79012	65-05-129/13 H315760			
7	1	Zugstangenverlängerung Guide rod extension	PA6			15-26-070/93 H208096	15-26-057/93 H204747			
8	4	Skt. Schraube M5x12 Hex. screw M5x12	A2-70			65-01-033/15 H78737				
9	1	CU Adapter SW4 CU adapter SW4	PA6		08-48-359/93 H330879	08-48-355/93 H207570	08-48-361/93 H327150			
10	1	O-Ring 6x2 O-ring 6x2	NBR					58-06-059/83 H320505	58-06-059/83 H320505	
11	1	O-Ring 11x2 O-ring 11x2	NBR					58-06-034/83 H321897	58-06-034/83 H321897	
12	1	O-Ring 11x3 O-ring 11x3	NBR						58-06-039/83 H208632	

Weitergabe sowie Vervielfältigung dieser Unterlage, Verwertung und Mitteilung ihres Inhalts nicht gestattet, soweit nicht schriftlich zugestanden. Verstoß verpflichtet zum Schadensersatz und kann strafrechtliche Folgen haben (Paragraph 18 UWG, Paragraph 106 UrhG). Eigentum und alle Rechte, auch für Patenterteilung und Gebrauchsmustereintragung, vorbehalten. SPX FLOW, Germany

Ersatzteilliste: spare parts list

CU4 Adapter

Datum:	11/08	01/09	03/09	11/10
Name:	Peters	Peters	Trytko	Schulz
Geprüft:	Spliethoff	Spliethoff	Peters	Spliethoff

Datum:	03/13	11/14	05/18	03/25
Name:	Trytko	Trytko	C.Keil	C.Keil
Geprüft:	Schulz		C.Keil	Spliethoff

SPX FLOW

RN 01.044.3

pos. item	Menge quantity	Beschreibung description	Material material	CU4 - S WS-Nr. ref.-no.	CU4 - S Langhub ø165 WS-Nr. ref.-no.	CU4 - Smini WS-Nr. ref.-no.	CU4 - Smax WS-Nr. ref.-no.	CU4 - T WS-Nr. ref.-no.	CU4 - Tmax WS-Nr. ref.-no.	CU4 - M WS-Nr. ref.-no.
13	1	V-Dichtung V-seal	NBR						28-32-010/83 H171060	
14	1	CU4 Schaltstange CU4 switch rod						08-60-905/93 H320480 - PA6	08-60-906/12 H321990 - 1.4301	
15	3	Zylinderschraube M5x16 Cyl. screw M5x16	A2-70					65-05-054/13 H79000	65-05-054/13 H79000	
16	4	Scheibe 9x5,48 Washer 9x5,48	A2							08-60-767/15 4 x H208842
17	4	Zyl. Schraube M5x35 Cyl. screw M5x35	A2-70							65-06-056/13 H79028
18	0	Zylinderschraube M8x25 Cyl. screw M8x25	A2-70	65-05-122/13 H79014						
19	0	D4 Zugstangen Adapter für CU4 D4 guide rod adapter for CU4	PA6.6	08-46-824/93 H336934						

Weitergabe sowie Vervielfältigung dieser Unterlage, Verwertung und Mitteilung ihres Inhalts nicht gestattet, soweit nicht schriftlich zugestanden. Verstoß verpflichtet zum Schadensersatz und kann strafrechtliche Folgen haben (Paragraph 18 UWG, Paragraph 106 UrhG). Eigentum und alle Rechte, auch für Patenterteilung und Gebrauchsmustereintragung, vorbehalten. SPX FLOW, Germany

Ersatzteilliste: spare parts list

CU4 Adapter

Datum:	11/08	01/09	03/09	11/10
Name:	Peters	Peters	Trytko	Schulz
Geprüft:	Spliethoff	Spliethoff	Peters	Spliethoff

Datum:	03/13	11/14	05/18	03/25
Name:	Trytko	Trytko	C.Keil	C.Keil
Geprüft:	Schulz		C.Keil	Spliethoff

SPX FLOW

RN 01.044.3

pos. item	Menge quantity	Beschreibung description	Material material	CU4 - D4 WS-Nr. ref.-no.						
		CU4 Adapter kpl. CU4 adapter cpl.		08-46-646-/93 H337098						
1.1	0	CU4 Adapter M CU4 adapter M	PA6.6 GF30							
1.2	0	CU4 Adapter T CU4 adapter T	PA6.6 GF30							
1.3	0	CU4 Adapter S CU4 adapter S	PA6.6 GF30							
1.4	1	CU4 Adapter D4 CU4 adapter D4	PA6.6 GF30	08-46-940/93 H336038						
2	2	CU4 Clamphalbschale kpl. CU4 clamp cpl.	Grivory GH-5H1	08-46-569/93 H319873						
3	2	Zylinderschraube M4x40 Cyl. screw M4x40	A2-70	65-05-040/13 H320360						
4	1	O-Ring 101,27x2,62 O-ring 101,27x2,62	NBR	58-06-493/83 H148389						
5	1	CU4 Magnetschaltnocke kpl. CU4 magnet operating cam cpl.	Zytel HTN	08-60-900/93 H320479						
6	0	Zyl. Schraube Cyl. screw	A2-70							
7	0	Zugstangenverlängerung Guide rod extension	PA6							
8	0	Skt. Schraube M5x12 Hex. screw M5x12	A2-70							
9	0	CU Adapter SW4 CU adapter SW4	PA6							
10	0	O-Ring 6x2 O-ring 6x2	NBR							
11	0	O-Ring 11x2 O-ring 11x2	NBR							
12	0	O-Ring 11x3 O-ring 11x3	NBR							

Weitergabe sowie Vervielfältigung dieser Unterlage, Verwertung und Mitteilung ihres Inhalts nicht gestattet, soweit nicht schriftlich zugestanden. Verstoß verpflichtet zum Schadensersatz und kann strafrechtliche Folgen haben (Paragraph 18 UWG, Paragraph 106 UrhG). Eigentum und alle Rechte, auch für Patenterteilung und Gebrauchsmustereintragung, vorbehalten. SPX FLOW, Germany

Ersatzteilliste: spare parts list

CU4 Adapter

Datum:	11/08	01/09	03/09	11/10
Name:	Peters	Peters	Trytko	Schulz
Geprüft:	Spliethoff	Spliethoff	Peters	Spliethoff

Datum:	03/13	11/14	05/18	03/25
Name:	Trytko	Trytko	C.Keil	C.Keil
Geprüft:	Schulz		C.Keil	Spliethoff

SPX FLOW

Blatt 5 von 5

RN 01.044.3

pos. item	Menge quantity	Beschreibung description	Material material	CU4 - D4 WS-Nr. ref.-no.	WS-Nr. ref.-no.	WS-Nr. ref.-no.	WS-Nr. ref.-no.	WS-Nr. ref.-no.	WS-Nr. ref.-no.	WS-Nr. ref.-no.
13	0	V-Dichtung V-seal	NBR							
14	0	CU4 Schaltstange CU4 switch rod								
15	0	Zylinderschraube M5x16 Cyl. screw M5x16	A2-70							
16	0	Scheibe 9x5,48 Washer 9x5,48	A2							
17	0	Zyl. Schraube M5x35 Cyl. screw M5x35	A2-70							
18	4	Zylinderschraube M8x25 Cyl. screw M8x25	A2-70	65-05-122/13 H79014						
19	1	D4 Zugstangen Adapter für CU4 D4 guide rod adapter for CU4	PA6.6	08-46-824/93 H336934						
20	1	D4 Magnet Hall sensor kpl. D4 magnet Hall sensor cpl.		08-46-826/93 H348521						

APV CU4 Direct Connect

CONTROL UNIT

SPXFLOW®

SPX FLOW

Design Center

Gottlieb-Daimler-Straße 13

D-59439 Holzwickede, Germany

P: (+49) (0) 2301-9186-0

F: (+49) (0) 2301-9186-300

SPX FLOW, Inc.

Production

611 Sugar Creek Road

Delavan, WI 53115, USA

P: (+1) 262 728 1900 or (800) 252 5200

F: (+1) 262 728 4904 or (800) 252 5012

E: wcb@spxflow.com

SPX FLOW

Production

Stanisława Jana Rolbieskiego 2

PL- Bydgoszcz 85-862, Poland

P: (+48) 52 566 76 00

F: (+48) 52 525 99 09

SPX FLOW reserves the right to incorporate the latest design and material changes without notice or obligation.

Design features, materials of construction and dimensional data, as described in this manual, are provided for your information only and should not be relied upon unless confirmed in writing. Please contact your local sales representative for product availability in your region.
For more information visit www.spxflow.com.

ISSUED 05/2022 - Original Manual

COPYRIGHT ©2022 SPX FLOW, Inc.